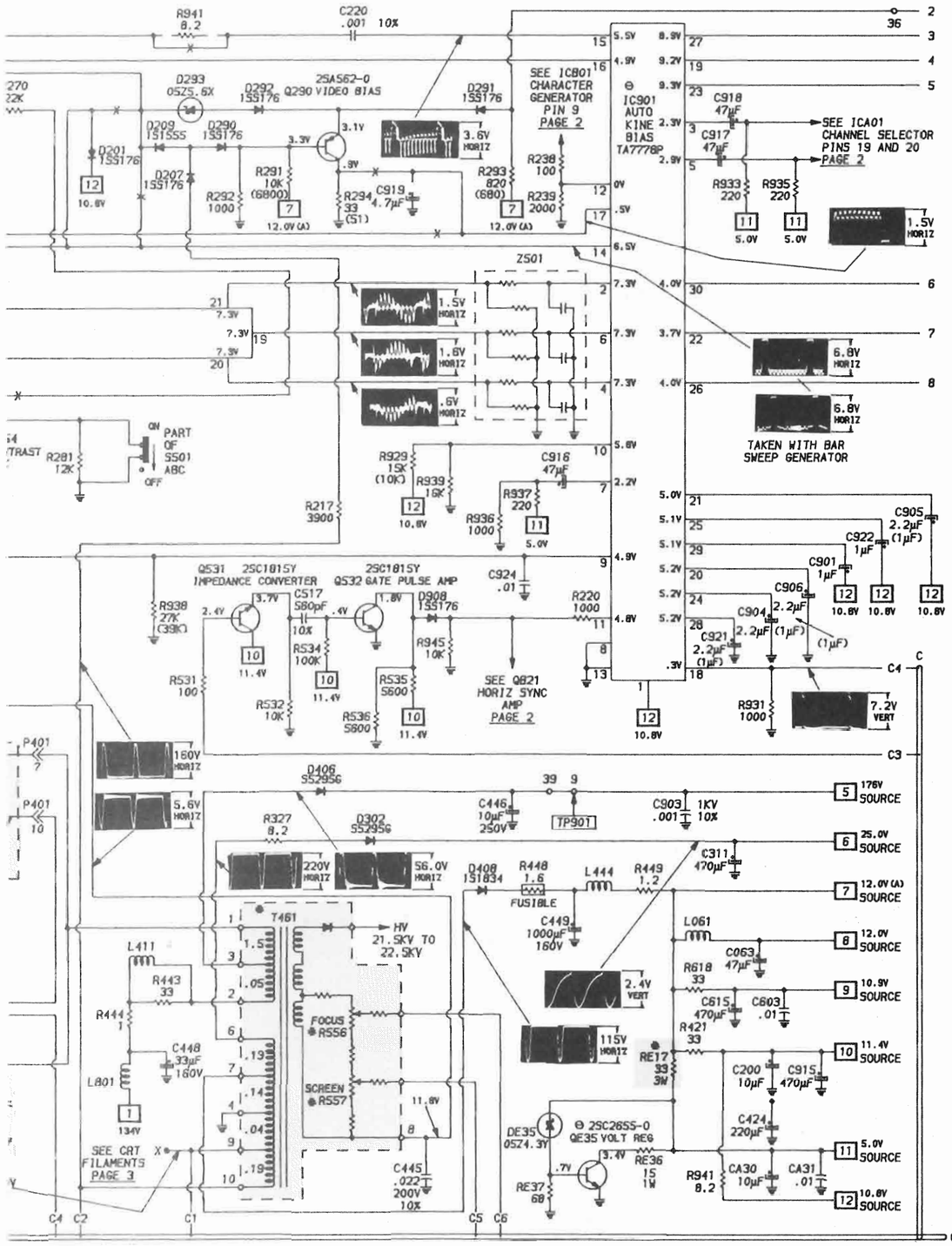

TOSHIBA MODELS
C1414M,CX414C,CX1414

SAMS PHOTOFACT®

For Supplier Address See PHOTOFACT Index

TOSHIBA MODELS
C1414M,CX414C,CX1414

TOSHIBA MODELS
C1414M,CX414C,CX1414

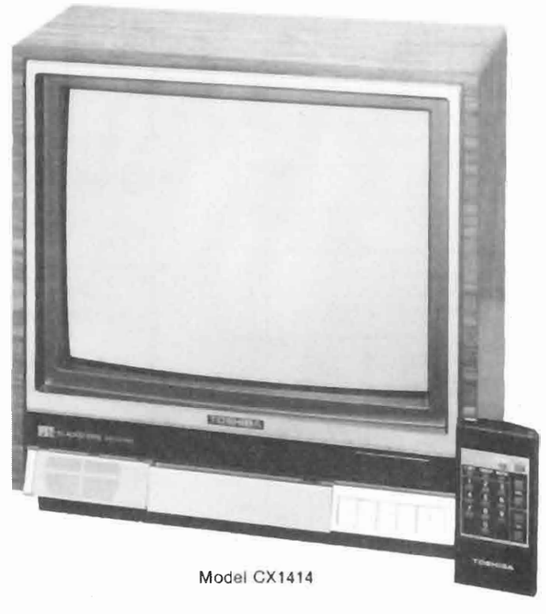

Model CX1414

SAFETY PRECAUTIONS

See page 4.

SERVICE INFORMATION

See Page 8.

INDEX

	Page
Alignment	
TV	6,7
Convergence Adjustments	36
Disassembly Instructions	37
GridTrace Location Guide	
CRT Board	26
Main Board	11,30
IC Functions and Terminal Guides	9,32
Miscellaneous Adjustments	36
Parts List	
TV	17 thru 23
Photos	
Cabinet-Rear View	37
CRT Board	16
CRT Neck Assembly	8
Horiz Sync Board	25
Main Board	10,12,13,28,29,31
Photos (Continued)	
Remote Sensor Board	24
SIF Board	25
Quick-Checks Troubleshooting	
CRT Board	15
Main Board	14,27
Safety Precautions	4
Schematics	
Power Supply	5
TV	2,3, 38 thru 41
Schematic Notes	2
Service Information	8
Servicing In the Field	37
Test Equipment	6
Troubleshooting	34,35
Troubleshooting Aid	33

SAMS™ Howard W. Sams & Co.
4300 West 62nd Street, P.O. Box 7092, Indianapolis, Indiana 46206 U.S.A.

The listing of any available replacement part herein does not constitute in any case a recommendation, warranty or guaranty by Howard W. Sams & Co., Inc., as to the quality and suitability of such replacement part. The numbers of these parts have been compiled from information furnished to Howard W. Sams & Co., Inc., by the manufacturers of the particular type of replacement part listed.

Reproduction or use, without express permission, of editorial or pictorial content, in any manner, is prohibited. No patent liability is assumed with respect to the use of the information contained herein.
© 1986 Howard W. Sams & Co., Inc.
4300 West 62nd Street, P.O. Box 7092, Indianapolis, Indiana 46206 U.S.A.
Printed in U.S. of America. 86PD01213

DATE 2-86 SET 2384 FOLDER 2

SET 2384 FOLDER 2

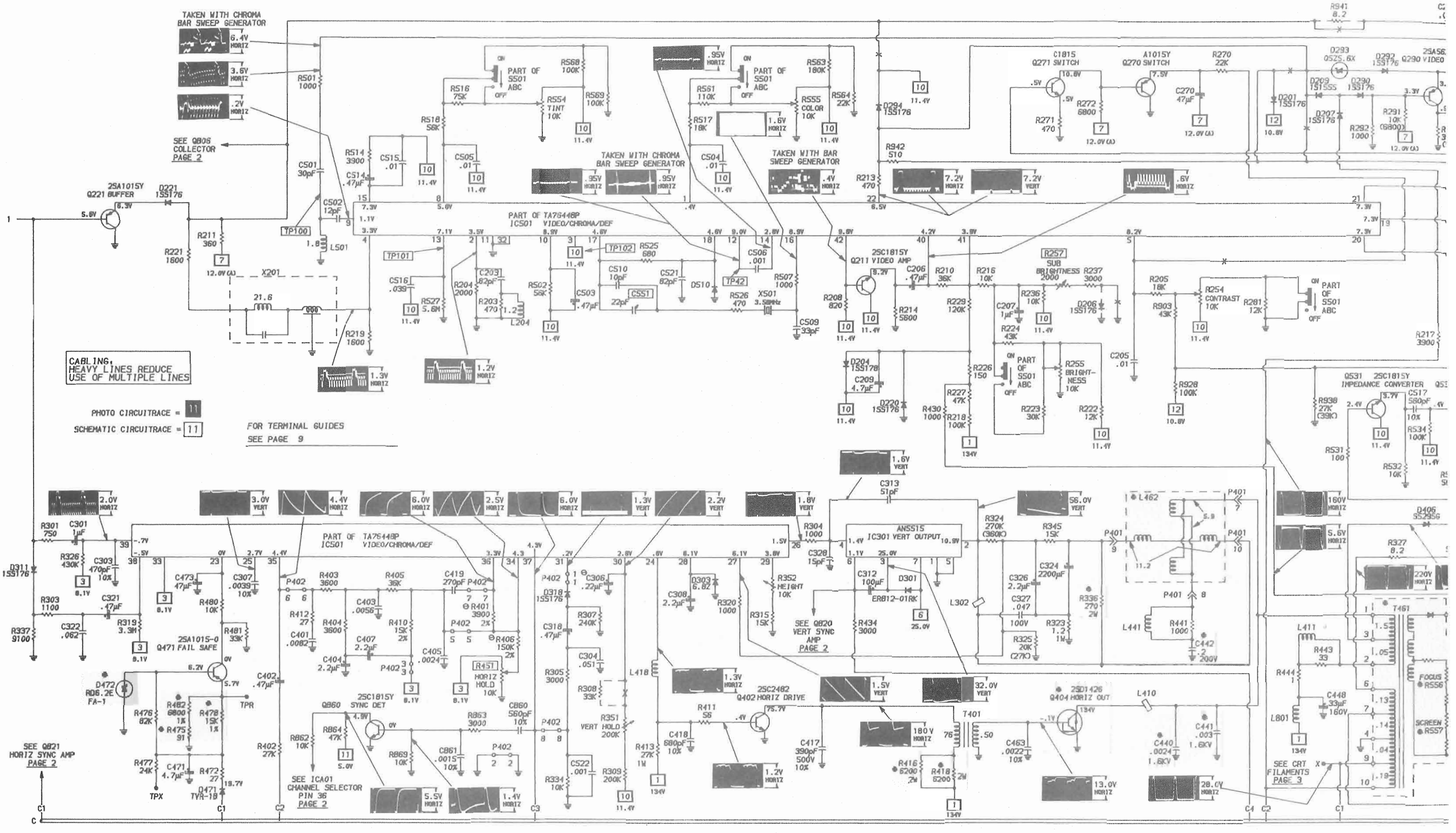
TAKEN WITH CHROMA BAR SWEEP GENERATOR
SEE QB06 COLLECTOR PAGE 2
2SA1015Y Q221 BUFFER
PART OF TA76448P IC501 VIDEO/CHROMA/DEF
TAKEN WITH CHROMA BAR SWEEP GENERATOR
TAKEN WITH BAR SWEEP GENERATOR
2SC1815Y Q211 VIDEO AMP
C1815 Q271 SWITCH
A1015Y Q270 SWITCH
2SA56 Q290 VIDEO
Q531 2SC1815Y IMPEDANCE CONVERTER
CABLING, HEAVY LINES REDUCE USE OF MULTIPLE LINES
PHOTO CIRCUITRACE = 11
SCHEMATIC CIRCUITRACE = 11
FOR TERMINAL GUIDES SEE PAGE 9
PART OF TA76448P IC501 VIDEO/CHROMA/DEF
AN5515 IC301 VERT OUTPUT
SEE Q820 VERT SYNC AMP PAGE 2
2SA1015-0 Q471 FAIL SAFE
2SC1815Y SYNC DET
SEE ICA01 CHANNEL SELECTOR PIN 36 PAGE 2
2SC2482 Q402 HORIZ DRIVE
2SD1426 Q404 HORIZ OUT
SEE Q821 HORIZ SYNC AMP PAGE 2
SEE CRT FILAMENTS PAGE 3
FOCUS R556
SCREEN R557

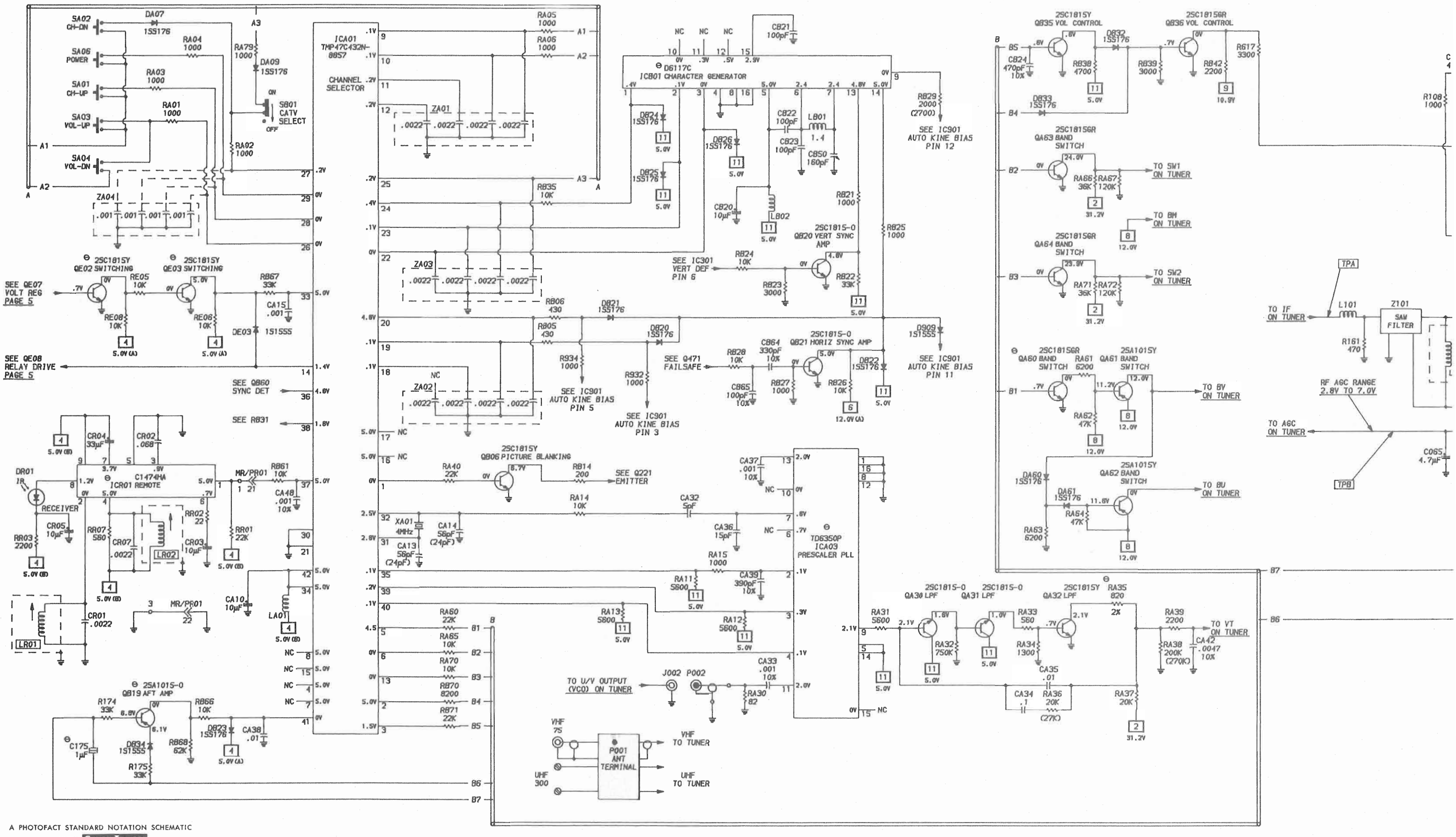

A PHOTOFACT STANDARD NOTATION SCHEMATIC WITH CIRCUITRACE®

© Howard W. Sams & Co., Inc. 1986

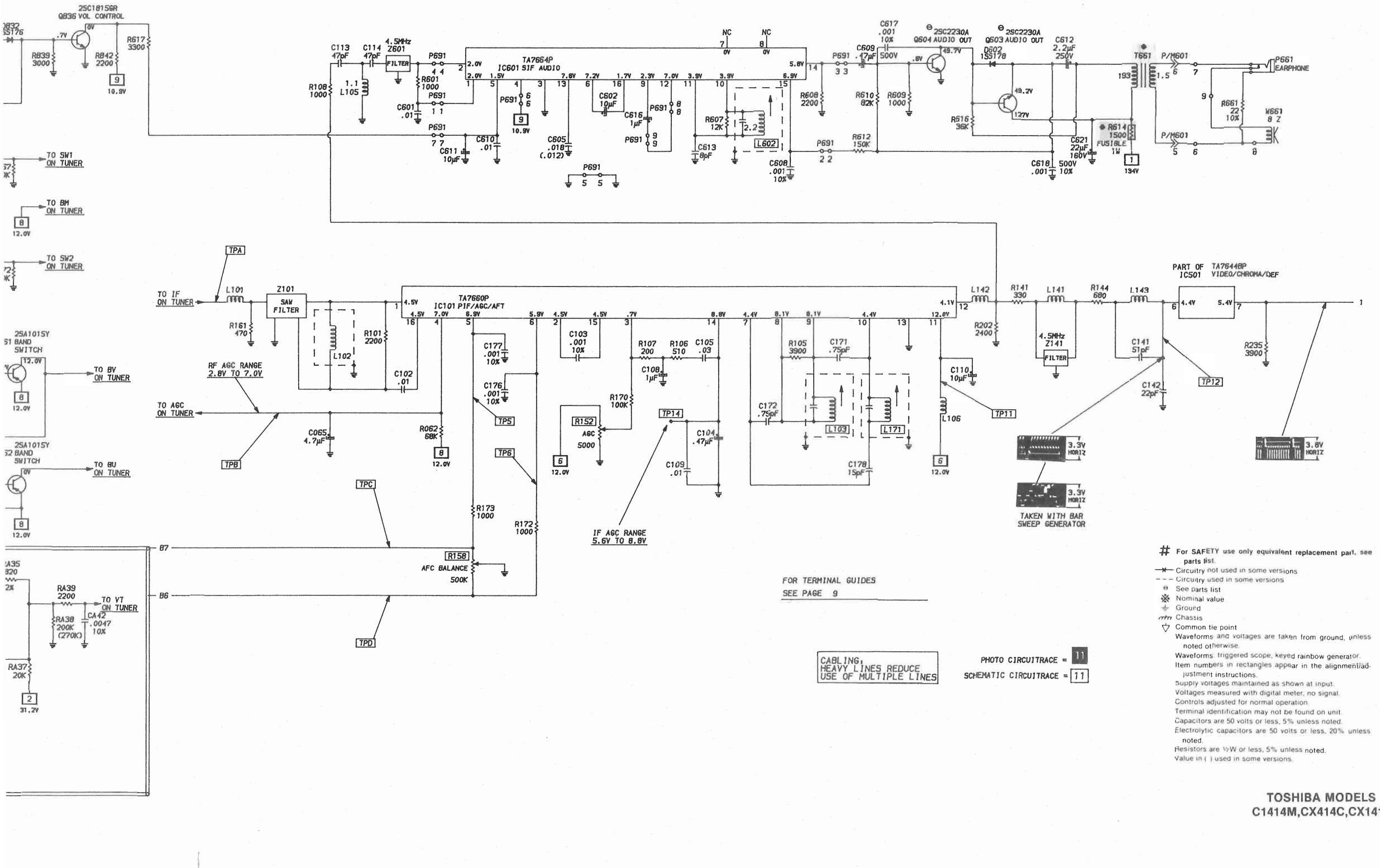

For SAFETY use only equivalent replacement part, see parts list.

- Circuitry not used in some versions
- Circuitry used in some versions
- See parts list
- Nominal value
- Ground
- Chassis
- Common tie point

Waveforms and voltages are taken from ground, unless noted otherwise.
Waveforms: triggered scope, keyed rainbow generator.
Item numbers in rectangles appear in the alignment/adjustment instructions.
Supply voltages maintained as shown at input.
Voltages measured with digital meter, no signal.
Controls adjusted for normal operation.
Terminal identification may not be found on unit.
Capacitors are 50 volts or less, 5% unless noted.
Electrolytic capacitors are 50 volts or less, 20% unless noted.
Resistors are ½W or less, 5% unless noted.
Value in ( ) used in some versions.

TOSHIBA MODELS
C1414M,CX414C,CX1414

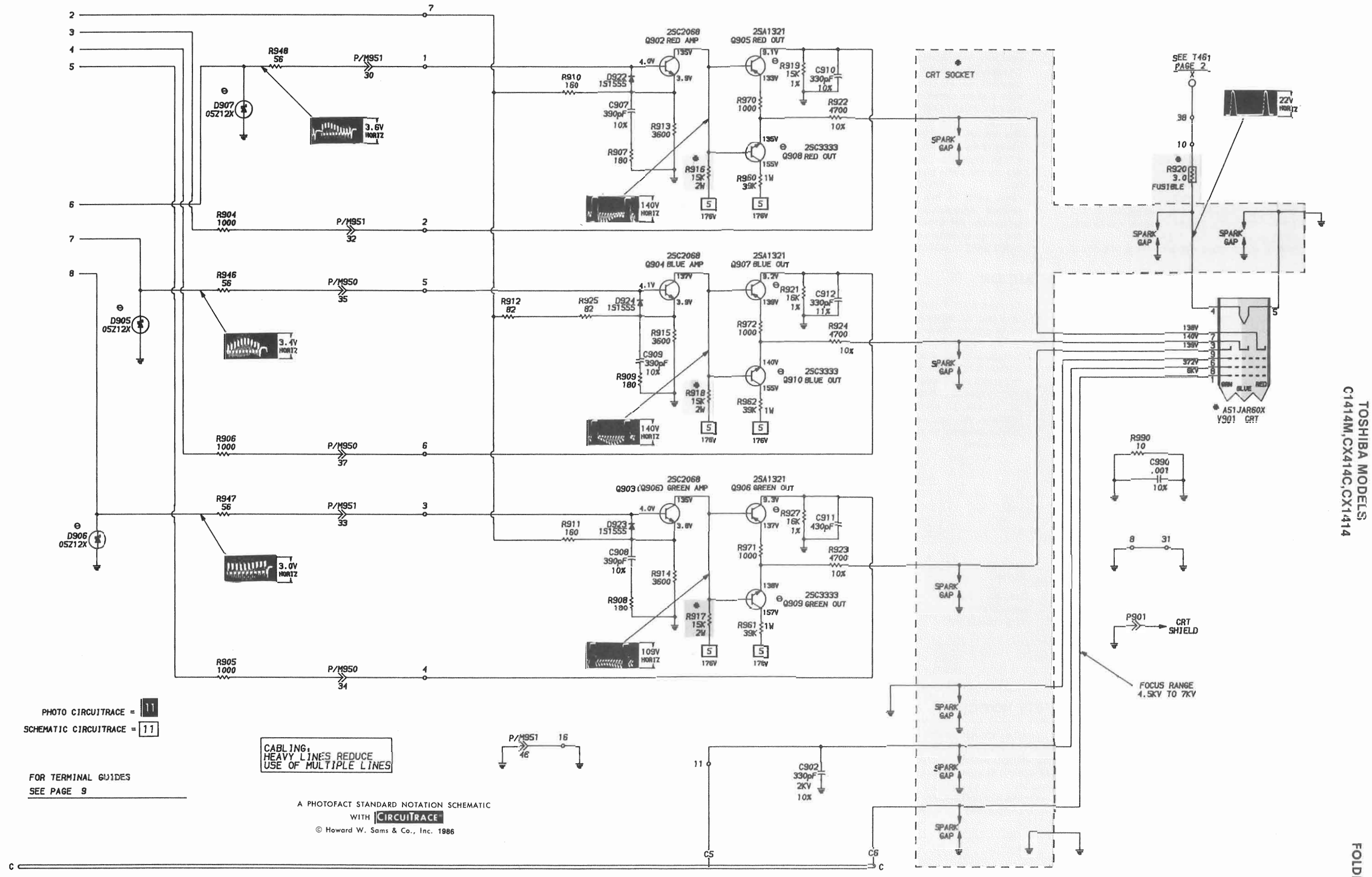
2SC2068 Q902 RED AMP
2SA1321 Q905 RED OUT
2SC3333 Q908 RED OUT
2SC2068 Q904 BLUE AMP
2SA1321 Q907 BLUE OUT
2SC3333 Q910 BLUE OUT
2SC2068 Q903 (Q906) GREEN AMP
2SA1321 Q906 GREEN OUT
2SC3333 Q909 GREEN OUT
CRT SOCKET
SPARK GAP
SEE T461 PAGE 2
R920 3.0 FUSIBLE
AS1JAR60X V901 CRT
P901 CRT SHIELD
FOCUS RANGE 4.5KV TO 7KV
D907 05Z12X
D905 05Z12X
D906 05Z12X
R948 56
R904 1000
R946 56
R906 1000
R947 56
R905 1000
P/M951
P/M950
C907 390pF 10%
C909 390pF 10%
C908 390pF 10%
C910 330pF 10%
C912 330pF 11%
C911 430pF
C902 330pF 2KV 10%
C990 .001 10%
R990 10
R910 160
R912 82
R911 160
R925 82
R907 180
R909 180
R908 180
R913 3600
R915 3600
R914 3600
R916 15K 2W
R917 15K 2W
R918 15K 2W
R919 15K 1%
R921 16K 1%
R927 16K 1%
R970 1000
R972 1000
R971 1000
R922 4700 10%
R924 4700 10%
R923 4700 10%
R960 39K 1W
R962 39K 1W
R961 39K 1W
3.6V HORIZ
3.4V HORIZ
3.0V HORIZ
140V HORIZ
109V HORIZ
22V HORIZ
PHOTO CIRCUITRACE = 11
SCHEMATIC CIRCUITRACE = 11
CABLING: HEAVY LINES REDUCE USE OF MULTIPLE LINES
FOR TERMINAL GUIDES SEE PAGE 9
A PHOTOFACT STANDARD NOTATION SCHEMATIC WITH CIRCUITRACE
© Howard W. Sams & Co., Inc. 1986

SAFETY PRECAUTIONS

1. Excessive high voltage can produce potentially hazardous X-RAY RADIATION. To avoid such hazards, the high voltage must not be above the specified limit. The nominal value of the high voltage of this receiver is 24.1 kV at zero beam current (minimum brightness) under a 120V AC power source. The high voltage must not, under any circumstances, exceed 26.1 kV.
   Each time a receiver requires servicing, the high voltage should be checked following the HIGH VOLTAGE CHECK procedure on page 4 in the service data for model CF914 Series (File No. 020-704). It is recommended that the reading of the high voltage be recorded as a part of the service record. It is important to use an accurate and reliable high voltage meter.
2. This receiver is equipped with a Fail Safe (FS) circuit which prevents the receiver from producing an excessively high voltage even if the B+ voltage increases abnormally. Each time the receiver is serviced, the FS circuit must be checked to determine that the circuit is properly functioning, following the FS CIRCUIT CHECK procedure on page 3 of this manual.
3. The only source of X-RAY RADIATION in this TV receiver is the picture tube. For continued X-RAY RADIATION protection, the replacement tube must be exactly the same type tube as specified in the parts list.
4. Some parts in this receiver have special safety-related characteristics for X-RAY RADIATION protection. For continued safety, parts replacement should be undertaken only after referring to the PRODUCT SAFETY NOTICE below.

SAFETY PRECAUTION

WARNING: Service should not be attempted by anyone unfamiliar with the necessary precautions on this receiver. The following are the necessary precautions to be observed before servicing this chassis.

1. **Since the chassis of this receiver has hazardous potential to ground whenever the receiver is plugged in (floating chassis), an isolation transformer should be used during any dynamic service to avoid possible shock hazard.**
2. Always discharge the picture tube anode to the CRT conductive coating before handling the picture tube. The picture tube is highly evacuated and if broken, glass fragments will be violently expelled. Use shatter proof goggles and keep picture tube away from the unprotected body while handling.
3. When replacing a chassis in the cabinet, always be certain that all the protective devices are put back in place, such as; non-metallic control knobs, insulating covers, shields, isolation resistor-capacitor network etc.
4. Before returning the set to the customer, always perform an AC leakage current check on the exposed metallic parts of the cabinet, such as antennas, terminals, screwheads, metal overlays, control shafts etc. to be sure the set is safe to operate without danger of electrical shock. Plug the AC line cord directly into a 120V AC outlet (do not use a line isolation transformer during this check). Use an AC voltmeter having 5000 ohm per volt or more sensitivity in the following manner:
   Connect a 1500 ohm 10 watt resistor, paralleled by a 0.15 mfd, AC type capacitor, between a known good earth ground (water pipe, conduit, etc.) and the exposed metallic parts, one at a time. Measure the AC voltage across the combination of 1500 ohm resistor and 0.15 mfd capacitor. Reverse the AC plug at the AC outlet and repeat AC voltage measurements for each exposed metallic part. Voltage measured must not exceed 0.3 volts RMS. This corresponds to 0.2 milliamp. AC. Any value exceeding this limit constitutes a potential shock hazard and must be corrected immediately.

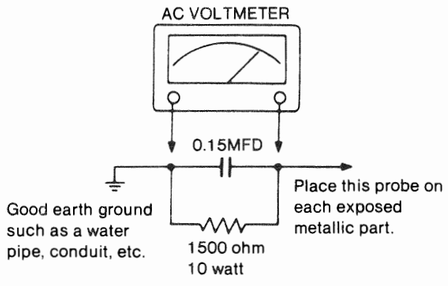

PRODUCT SAFETY NOTICE

Many electrical and mechanical parts in this chassis have special safety-related characteristics. These characteristics are often passed unnoticed by a visual inspection and the protection afforded by them cannot necessarily be obtained by using replacement components rated for higher voltage, wattage, etc. Replacement parts which have these special safety characteristics are identified in this manual and its supplements; electrical components having such features are identified by shading on the schematic diagram
Before replacing any of these components, read the parts list in this manual carefully. The use of substitute replacement parts which do not have the same safety characteristics as specified in the parts list may create shock, fire, X-ray radiation or other hazards.

Courtesy of the Manufacturer

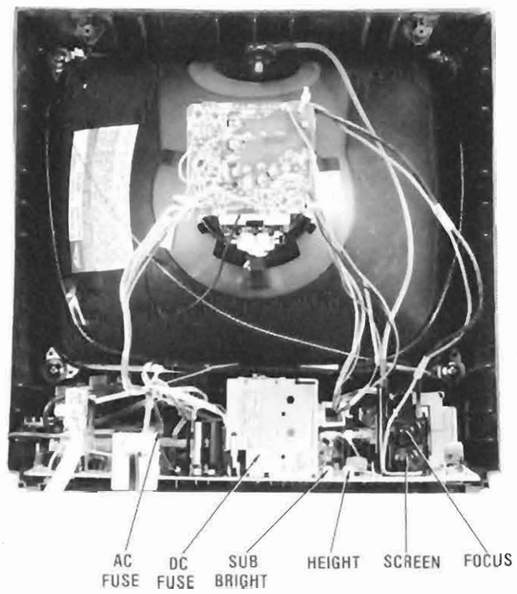

CABINET—REAR VIEW

DISASSEMBLY INSTRUCTIONS

CHASSIS REMOVAL

Remove six screws holding cabinet back and remove back. Disconnect speaker and antenna connectors. Disconnect HV anode, CRT socket, deflection yoke connector, degaussing coil connector and ground leads. Release one latch holding main board assembly to cabinet bottom and remove assembly from cabinet.

CRT REMOVAL

Follow "Chassis Removal" procedure and lay set facedown on a soft protective surface. (See caution). Remove four screws holding CRT to cabinet front and lift CRT out of cabinet.
Do not lift CRT by the neck.

SERVICING IN THE FIELD

CRT IMPLOSION PROTECTION AND CLEANING

Implosion protection is an integral part of the picture tube, cleaning accomplished without CRT removal.

FUSE DEVICES

A 1.2-amp fuse is used for low-voltage power-supply protection. (See Placement Chart.)

A 3-amp fuse is used for AC line protection. (See Placement Chart.)

VHF/UHF TUNER

Channel (up) and (down) buttons are provided for channel scanning. Ten numbered buttons on the remote are provided for one or two digit entry channel selection with channel (up) and (down) buttons provided for channel scanning. Fine tuning is automatic. No pretuning.

HORIZONTAL OSCILLATOR

Adjustment of the horizontal hold is accomplished by the proper setting of the Horizontal Hold.

FOCUS

The focus may be varied by a focus control. (See photo, Cabinet - Rear View.)

AGC

The AGC may be varied by AGC Delay control. (See Placement Chart.)

MISCELLANEOUS ADJUSTMENTS

HIGH VOLTAGE CHECK

Connect a high voltage probe to the CRT HV anode. Turn contrast and Brightness Controls to MINIMUM. Nominal High Voltage is 28.0KV. NOTE: There is no high voltage adjustment on this chassis. High voltage should not exceed 30.5KV.

AGC ADJUSTMENT

Tune in a strongest station available. Turn AGC Control (R152) fully counterclockwise. Then turn clockwise until snow just disappears from the screen.

SUB BRIGHTNESS ADJUSTMENT

Tune in a color program and set ABC Switch to On. Set Contrast Control to Maximum and Brightness Control to click position. Set Color and Tint Controls to midrange. Set Sub Brightness Control (R257) to midrange and let receiver warmup for five minutes. Advance Sub Bright- ness Control to a point just before picture starts to bloom. Check picture at all bright- ness levels and retouch Sub Brightness Control if necessary.

COLOR SYNC ADJUSTMENT

Connect a color bar generator to the antenna terminals and tune in a color bar pattern. Allow a five minute warmup time. Connect a 200pF Capacitor from TP42 to TP100. Connect a 1000 Ohm Resistor from TP101 to TP102. Set ABC Switch (S501) to Off, Tint Control fully counterclockwise, Color Control to Maximum and Contrast to MINIMUM. Adjust Color Sync Trim- mer Capacitor (C551) until colors bars stop or slowly drift across the screen. When com- plete, remove test capacitor and resistor.

HORIZONTAL HOLD ADJUSTMENT

Tune in a TV station and adjust for a normal picture. Adjust Horizontal Hold Control (R451) to a point where it is virtually impossible to lose horizontal sync while switching from channel to channel.

PURITY ADJUSTMENT

NOTE: Before attempting any purity adjustments the receiver should be operated for at least fifteen minutes. Turn Contast and Brightness Controls to Maximum. Use a degaussing coil to demagnetize the CRT. Use jumpers to connect red and blue cathodes of CRT to TP901, (Point 9 of CRT board), to obtain a green raster. Loosen the clamp screw holding the yoke and slide the yoke backward to obtain the vertical green band. Rotate and spread the Tabs of the Purity Magnets until the green band is centered on the screen. Move the yoke slowly forward until a uniform green screen is obtained.

CRT TRACKING

Tracking is automatic. Controls for this adjustment have been eliminated in this set.

CONVERGENCE ADJUSTMENT

Note: Before attempting convergence adjust- ments the receiver should be operated for at least fifteen minutes. Connect a color bar generator to the antenna terminals and tune in a crosshatch pattern. Adjust the tabs of the 4-Pole magnets to converge the red and blue vertical and horizontal lines at the center of the screen. Adjust the tabs of the 6-Pole magnets to converge the red, blue and green vertical and horizontal lines at the center of the screen. Remove the rubber wedges from the CRT. Tilt the yoke vertically and horizontally to converge edges of screen. Apply adhesive to wedges and care- fully replace on CRT.

DISPLAY POSITION ADJUSTMENT

Apply power to set. Depress "Timer" or "Time Set" button on remote control to place display on screen. Adjust Display position control (CB50) to place display in desired horizontal position on screen. Depress "Timer" or "Time Set" button a second time to remove display from screen.

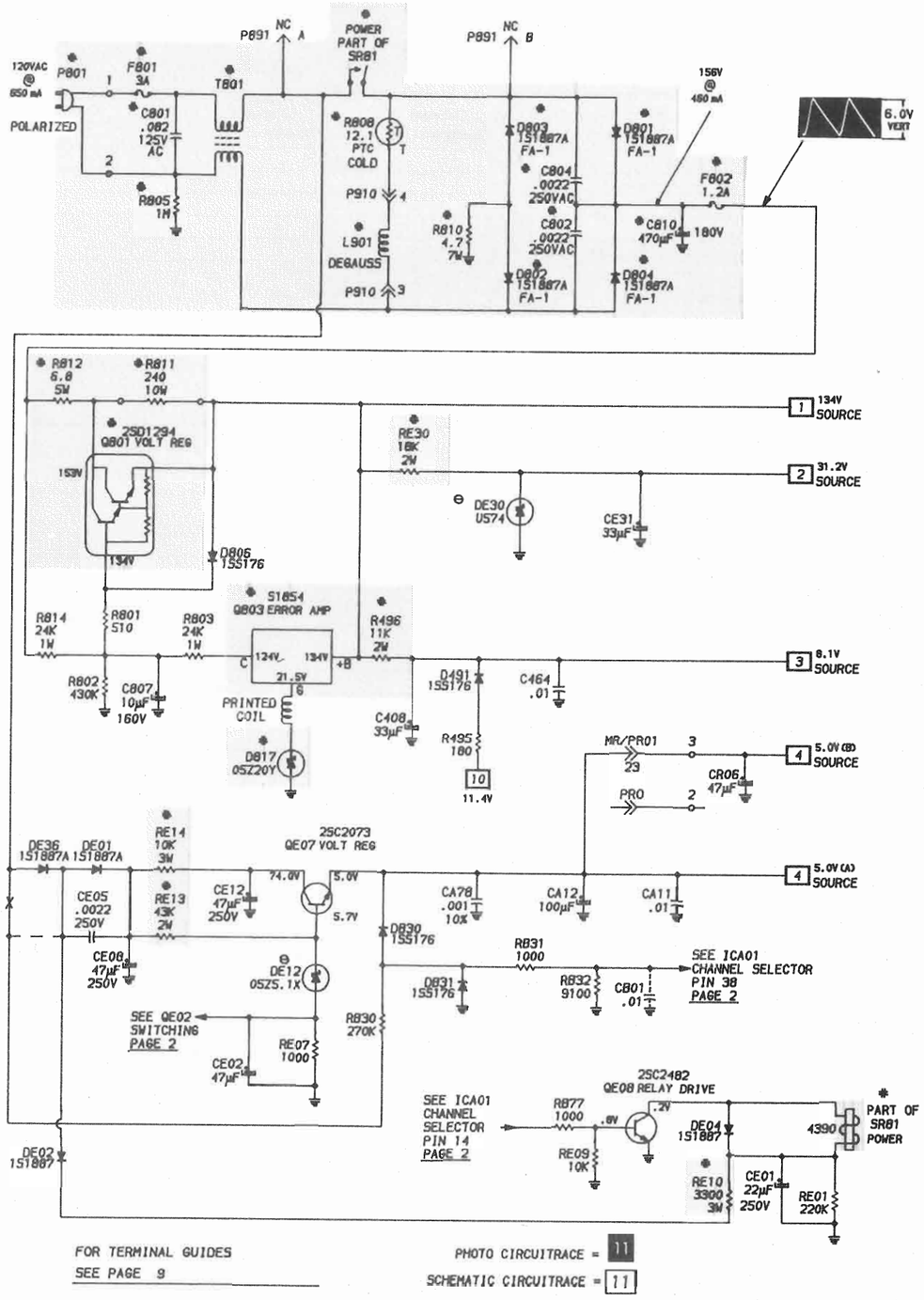

FOR TERMINAL GUIDES SEE PAGE 9

PHOTO CIRCUITRACE = 11

SCHEMATIC CIRCUITRACE = 11

A PHOTOFACT STANDARD NOTATION SCHEMATIC WITH CIRCUITRACE

© Howard W. Sams & Co., Inc. 1986

TEST EQUIPMENT

Test Equipment listed by Manufacturer illustrates typical or equivalent equipment used by SAMS' Engineers to obtain measurements and is compatible with most types used by field service technicians.

TEST EQUIPMENT (TV)

Equipment Name	B & K Precision Equipment No.	Sencore Equipment No.	Simpson Equipment No.
OSCILLOSCOPE	1560	SC61	454
GENERATORS			
RGB	1260		
MULTIBURST SIGNAL	1260	VA62	
COLOR BAR	1211A,1248,1251,1260	VA62, CG25	431
ANALOG VOM	277		260-7,160,165, 260-6XL,260-7P, 260-6XLP
DIGITAL VOM	2830	DVM37,DVM56,SC61	463,464,470,474,467E
FREQUENCY METER	1803,1805	FC71,SC61	710
HI-VOLTAGE PROBE VOM/DMM Accessory probes	HV-44	HP200	248 00168,00411,00749
ISOLATION TRANSFORMER	TR110,1604,1653,1655	PR57	
CAPACITANCE ANALYZER	820	LC53	
CRT ANALYZER	467,470	CR70	
TEMPERATURE PROBE	TP-28		IR-10,00760,00758; 383,389,388
AC LEAKAGE TESTER	1655	PR57	229
ILLUMINATION METER			408-2
LOGIC PROBE	DP51		
LOGIC PULSER	DP101		
INDUCTANCE ANALYZER		LC53	
FLYBACK YOKE TESTER		LC53,VA62	

TV ALIGNMENT INSTRUCTIONS

Use an isolation transformer, or observe polarity, and maintain line voltage at 120VAC.
Allow a 20-minute warm-up period for receiver and test equipment.
Suggested Alignment Tools: GC ELECTRONICS
L103, L171, L602 ..... None available
LZ01 9440
C551, CB50 8605

PRELIMINARY INSTRUCTIONS

Set the channel selector to the highest unused channel. Set scope sweep to external.
Connect scope vertical input to scope vertical input on sweep/marker generator. Connect scope external horizontal input to scope horizontal input on sweep/marker generator.
Ground test equipment to TV chassis unless specified otherwise. Use only enough generator output to provide a usable indication.
Note: Response may vary slightly from that shown.
Set AGC Delay Control (R152) to midrange.
Open Solder Bridge at TPA.
Connect A+8.5VOM Bias to TP14.

VIDEO IF ALIGNMENT (SWEEP MARKER GENERATOR)

DIRECT PROBE FROM SWEEP/MARKER GENERATOR	SWEEP GENERATOR OUTPUT	SWEEP GENERATOR FREQUENCY	MARKER GENERATOR FREQUENCY	REMARKS
To TP12	To TPA	44MHz (10MHz Sweep)	45.75MHz	Adjust L103 for Maximum 45.75MHz marker. See Figure 1.

TROUBLESHOOTING (Continued)

(Q221). IF the waveform is present at pin 4 check for a video waveform at pin 22 of IC501. If the waveform is absent at pin 22, check the voltages, waveforms and components associated with pins 2 thru 7, 22, 40, 41 and 42 of IC501. IF the waveform is present check the voltages, waveforms and components associated with pins 1, 9, 10, 11, 12, 14, 17, 18, 22, 26, 30 of Auto Kine Bias IC (IC901), Video Bias Transistor (Q290), Red, Green, Blue Amp Transistors (Q902, Q903, Q904), Red Output Transistors (Q905 and Q908), Green Output Transistors (Q906 and Q909), Blue Output Transistors (Q907 and Q910) and the CRT. IF the brightness is inadequate or cannot be controlled check the voltages and components associated with Transistors Q531 and Q532.

VERTICAL

If there is no vertical sweep, inject a vertical drive signal at pin 26 of Video/Chroma/Defelection IC (IC501). If vertical deflection returns, check the voltages, waveforms and components associated with pins 25 thru 31 of IC501. If vertical sweep does not return, check the voltages, waveforms and components associated with Vertical Output IC (IC301) and the vertical winding of Deflection Yoke (L462). If the vertical oscillator is off frequency, check the voltages, waveforms and components associated with pins 30 and 31 of IC501. Vertical linearity or foldover problems may be caused by vertical feedback and bias circuits, check Electrolytics C306, C308, C312, C324 and C326 for defects.

SYNC

If there is no vertical or horizontal sync, check for both vertical and horizontal waveforms at pins 38 and 39 of Video/Chroma/Deflection IC (IC501). If these waveforms are absent. check the voltages and components associated with pins 38 and 39 of IC501. If these waveforms are present, check for the proper vertical pulses at pins 30, 31 and 37 of IC501, and horizontal pulses at pins 34, 35 and 36 of IC501.

RASTER

Check the CRT and CRT voltages. If there is no Green, check the voltages, waveforms and components associated with pins 1, 23, 25, 26 of Auto Kine Bias IC (IC901) Green Transistor (Q903) and Green Output Transistors (Q906 and Q909). If there is no Blue, check the voltages, waveforms and components associated with pins 19, 21 and 22 of IC901, Blue Amp Transistor (Q904) and Blue Output Transistors (Q907 and Q910). If there is no Red, check the voltages, waveforms and components associated with pins 27, 29 and 30 of IC901, Red Amp Transistor (Q902) and Red Output Transistors (Q905 and Q908). If the raster has a keystone shape, check the Deflection Yoke. If the raster has height or width problems, refer to the "Vertical" or "Horizontal and Power Supply Sections" of this Troubleshooting Guide.

CHROMA

If there is no color, check for a chroma waveform at pin 9 of Video Chroma/Deflection IC (IC501). If the waveform is absent, check the components associated with pin 9 of IC501 and pins 15 and 16 of IC901. If the waveform is present, check for the proper chroma waveforms at pins 19, 20, and 21 of IC501. If these waveforms are absent, check the voltages, waveforms and components associated with pins 8 thru 21 of IC501, check the 3.58MHz oscillator at pins 16, 17 and 18 of IC501. If there is no color sync, check the adjustment of capacitor C551. If there is inadequate Tint Range, check the voltages, waveforms and components associated with pins 8, 10 and 12 of IC501. If the proper waveforms are present at pins 19, 20 and 21, check for the proper color waveforms at pins 22, 26, and 30 of Auto Kine Bias IC (IC901). If these waveforms are absent check the voltages, waveforms and components associated with pins 2 thru 8, 15 and 19 thru 30 of IC901. If the waveforms are present at pins 22, 26, and 30 of IC901 check the voltages, waveforms and components associated with Transistors Q902 thru Q910 and the CRT.

TROUBLESHOOTING

POWER SUPPLY

If there is no raster or sound, check AC Fuse F801 and DC Fuse F802. If F801 is open, check Bridge Rectifier Diodes D801 thru D804, Capacitors C801, C802, C804 and Electrolytic C810. If F802 is open, check Voltage Regulator Transistor (Q801), Horizontal Output Transistor (Q404) and associated components for defects. Apply 120V AC, depress Power Switch and check for 153V at the collector of Q801. If this voltage is absent, check Line Filter (T801), Resistor R810 and Power Relay (SR81). Determine if Relay is being activated when Power Button is depressed. If Relay is not being actuated, check Relay Drive Transistor (QE08), pins 9, 14, 29 and 42 of Channel Selector IC (ICA01) and all associated components. If 153V is present at the collector of Q801 check for 134V at the emitter of Q801. If this voltage is absent, check the voltages and components associated with Error Amp IC (Q803). If 134V is present at the emitter of Q801, refer to the "Horizontal Section" of this Troubleshooting guide. If voltage is approximately 166V the TV may be in Shut-Down, refer to the "High Voltage Shut-Down Section" of this Troubleshooting guide.

HORIZONTAL

Determine if TV is in Shut-Down, refer to voltages at the bottom of this page. If set is not in Shut-Down, inject a horizontal signal at the base of Horizontal Output Transistor (Q404). If horizontal sweep returns, check the voltages, waveforms and components associated with Transistor Q402 and pins 33 thru 37 of Sync/Sweep/Video/Chroma IC (IC501). If horizontal deflection does not return, check the voltages, waveforms and components associated with Transistor Q404 and Horizontal Output Transformer (T461). The High Voltage Rectifier is part of Transformer T461 and may be defective. Check Rectifier Diodes D302, D406, D408, D471 and associated components for defects. If the Horizontal Oscillator is off frequency, check the voltages and components associated with pins 34 and 36 of IC501. Horizontal linearity or foldover problems can be caused by capacitors C440, C441, and C442.

Voltages taken with TV in Shut-Down

IC501	Q801
Pin 23 1.5 V	(E) 166V

HIGH VOLTAGE SHUTDOWN

The High Voltage is monitored by Diode D471 with rectifying pulses from the Horizontal Output Transformer (T461). Should the High Voltage increase the rectified voltage at the cathode of D471 will also increase. This increased voltage is applied to the emitter of Fail Safe Transistor (Q471) triggering it into conduction, which activates the Fail Safe circuit at pin 23 of Sync/Sweep/Video/Chroma IC (IC501), shutting down the set. To troubleshoot, remove D471 from circuit and use a Variac for AC Power. Start with 60V AC and increase as may be necessary to locate defect. Return D471 to circuit.

Voltages taken with TV in Shut-Down

IC501	Q801
Pin 23 1.5	(E) 166V

NOTE: Care should be taken in defeating the High Voltage Shut-Down circuitry as this may cause excessive Xradiation and damage to the CRT, Transformer T461 and associated components. Monitor the High Voltage and troubleshoot.

IF AGC

Inject a Video IF signal at the IF input and check for video on the CRT. If video is present, check the Tuner, Antenna Input Assembly, Tuners Bandswitch Circuits and Tuner AFC circuit at pins 5 thru 10 of PIF/AGC/AFT IC (IC101). If there is no video on the CRT, check for a video waveform at TP12. If there is no video at TP12, refer to the Video section of this Troubleshooting guide. If there is no video at TP12, apply AGC bias to TP14. If video is now present at TP12, check the voltages and components associated with pins 3, 4, and 14 of IC101. If there is still no video at TP12, check the voltages, waveforms and components associated with pins 1, 2, 11, 12, 13 15 and 16 of IC101. A defective AGC circuit can cause an overloaded picture, excessive snow, or loss of picture and sound. See AGC voltage chart for voltages that change with signal.

IC101

Pin 4	3.6V
Pin 14	5.8V

AUDIO

If there is no audio, inject an audio signal at pin 14 of SIF/Audio IC (IC601) and check for audio at the speaker. If there is no audio, check the voltages, waveforms and components associated with pin 14 of IC601 and Audio Output Transistors (Q603 and Q604). If there is audio at the speaker, inject an audio IF signal at pin 2 of IC601 and with volume at maximum, check for sound at the speaker. If there is no sound at the speaker, check the voltages, waveforms and components associated with IC601. Check the voltage at pin 5, it should vary from 1.6V at minimum volume to 9.4V at maximum, also check the voltages and components associated with Volume Control Transistor (QB35 and QB36) and pins 2 and 3 of Channel Selector IC (ICA01). If there is audio at the speaker with an audio IF signal injected at pin 2 of IC601, check the components associated with pin 2 of IC601.

VIDEO

If there is no video, inject a video signal at TP12 and check for video on the CRT. If video is present refer to the IF AGC section of this Troubleshooting guide. If there is no video on the CRT, check for a video waveform at pin 4 of IC501. If the waveform is absent, check the voltages, waveforms and components associated with pins 6 and 7 of Video/Chroma/Deflection IC (IC501), and Buffer Transistor

TV ALIGNMENT INSTRUCTIONS (Continued)

VIDEO IF ALIGNMENT (BAR SWEEP GENERATOR)

BAR SWEEP GENERATOR	SCOPE INPUT	REMARKS
To Antenna Terminal	To TP12	Perform Video IF Adjustments per SWEEP/MARKER GENERATOR Instructions above. See Figure 3.

SOUND IF ALIGNMENT

Tune in a station and adjust L602 for maximum sound. Reduce signal strength at the antenna terminals until distortion appears. Continue to reduce the signal while aligning for undistorted output by adjusting L602.

AUTOMATIC FINE TUNING ALIGNMENT

Connect as explained in preliminary instructions unless specified otherwise.
Open Solder Bridge at TPA, TPC, TPD. (TPC Junction R174 and R158) (TPD Junction R175 and R178).
Connect a 3.0V Bias to TP14. Connect a VTVM from TP6 (+) to TP5 (-).
Adjust AFC Balance Control (R158) for -0.5 Volts DC.
Remove VTVM.

DIRECT PROBE FROM SWEEP/MARKER GENERATOR	SWEEP GENERATOR OUTPUT	SWEEP GENERATOR FREQUENCY	MARKER GENERATOR FREQUENCY	REMARKS
TP6	TPA	44MHz (10MHz Sweep)	45.75MHz	Connect 33uF Capacitor from TP11 (+) to TP14 (-). Adjust L171 to place 45.75MHz marker at crossover. See Figure 2. NOTE: Resolder Bridges at TPA, TPC and TPD. Remove Capacitor.

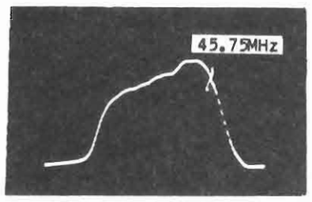

Figure 1

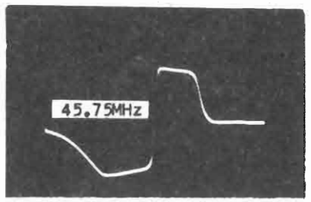

Figure 2

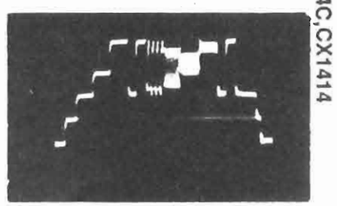

Figure 3

REMOTE CONTROL RECEIVER ALIGNMENT

Tune in a TV Station.

SIGNAL GENERATOR		CONNECT VTVM	ADJUST	REMARKS
COUPLING	FREQUENCY			
Use Transmitter	Press Volume Down Button and Hold	Connect Scope to Terminal 2 on Remote Sensor Board (Pin 2 ICR01)	LR01	Adjust LR01 for maximum amplitude of signal on scope.

FS CIRCUIT CHECK

The Fail Safe (FS) circuit check is indispensable for the final check in the servicing. Checking should be done following the steps below.

1. Turn the power switch on and adjust customer controls for normal operation.
2. Temporarily short TP- R and TP- X on the Main Board with a jumper wire. Raster and sound will disappear.
3. The receiver must remain in this state even after removing the jumper wire. This is the evidence that the FS circuit is functioning properly.
4. To obtain a picture again, temporarily turn the receiver off and allow the FS circuit more than 5 seconds to reset. Then turn the power switch on to produce a normal picture.

Troubleshooting Guide for Fail Safe Circuit

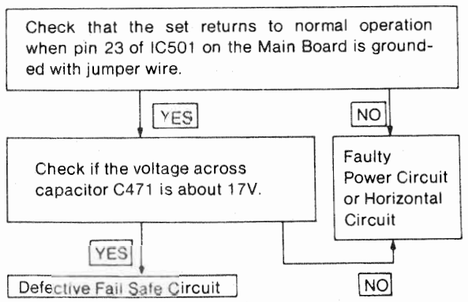

Courtesy of the Manufacturer

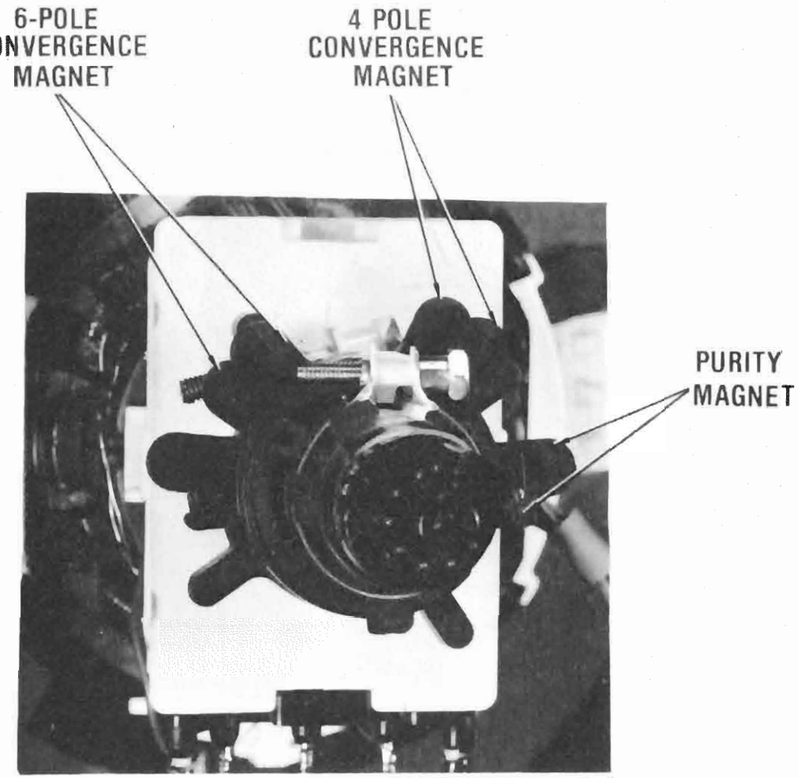

CRT NECK ASSEMBLY

TROUBLESHOOTING AID

Note: Waveforms taken with triggered scope, Keyed-Rainbow generator. Schematic voltages measured with digital meter, no signal. Controls adjusted for normal operation.

PICTURE or SOUND

NO PIC, NO SOUND, NO RASTER: Check AC power supply and sources generated from Horizontal Output Transformer (T461). Refer to "Troubleshooting" Power Supply and Horizontal circuits.

NO PIC, NO SOUND, HAS RASTER: Check IF-AGC and source voltages from Horizontal Output Transformer (T461). Refer to "Troubleshooting" IF-AGC and Horizontal circuits.

NO PIC, HAS SOUND, NO RASTER: Check Horizontal Output Transformer (T461) sources and Video circuit. Refer to "Troubleshooting" Horizontal and Video circuits.

NO PIC, HAS SOUND, HAS RASTER: Refer to "Troubleshooting" Video circuit.

HAS PIC, NO SOUND: Refer to "Troubleshooting" Audio circuit.

OVERLOADED PICTURE: Refer to "Troubleshooting" IF-AGC circuit.

LOW OR EXCESSIVE BRIGHTNESS: Check Video and Luminance circuits. Refer to "Troubleshooting" Video circuit.

SWEEP

NO RASTER, HAS SOUND: Check HV rectifier, Part of Horizontal Output Transformer (T461). Refer to "Troubleshooting" Horizontal circuit.

NO RASTER, NO SOUND: Refer to "Troubleshooting" Horizontal circuit.

NO VERT DEFLECTION: Refer to "Troubleshooting" Vertical circuit.

POOR VERT LIN OR FOLDOVER: Refer to "Troubleshooting" Vertical circuit.

POOR HORIZ LIN OR FOLDOVER: Refer to "Troubleshooting" Horizontal circuit.

NARROW PICTURE: Refer to "Troubleshooting" Horizontal circuit.

VERT OFF FREQUENCY: Refer to "Troubleshooting" Vertical circuit.

HORIZ OFF FREQUENCY: Refer to "Troubleshooting" Horizontal circuit.

SYNC

NO VERT/HORIZ SYNC: Refer to "Troubleshooting" Sync circuit.

RASTER

YELLOW (NO BLUE): Check Chroma and Blue Output circuits. Refer to "Troubleshooting" Raster circuit.

CYAN (NO RED): Check Chroma and Red Output circuits. Refer to "Troubleshooting" Raster circuit.

MAGENTA (NO GREEN): Check Chroma and Green Output circuits. Refer to "Troubleshooting" Raster circuit.

COLOR (B/W operating normally)

NO COLOR: Refer to "Troubleshooting" Chroma circuit.

WEAK COLOR: Refer to "Troubleshooting" Chroma circuit.

NO COLOR SYNC: Refer to "Troubleshooting" Chroma circuit.

NO GREEN: Check Chroma and Green Output circuits. Refer to "Troubleshooting" Raster circuit.

NO BLUE: Check Chroma and Blue Output circuits. Refer to "Troubleshooting" Raster circuit.

NO RED: Check Chroma and Red Output circuits. Refer to "Troubleshooting" Raster circuit.

INCORRECT HUE (TINT): Refer to "Troubleshooting" Chroma circuit.

ICA03
TD6312P

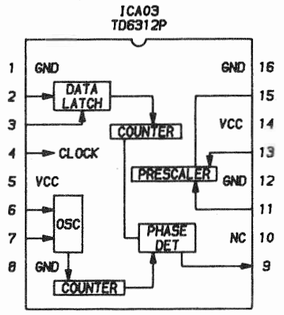

IC601
TA7664P

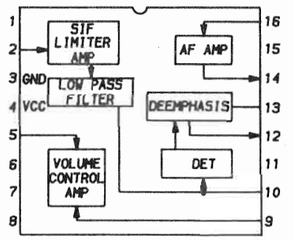

ICB01
μPD6117C

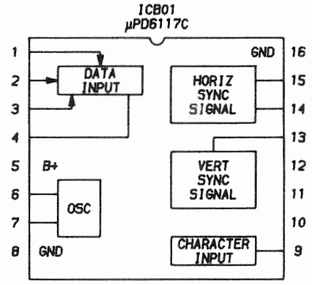

IC901
TA7763P

1	VCC		R OUT	30
2	(R-Y) IN	R	FILTER	29
3	TK R IN		FILTER	28
4	(G-Y) IN		R SONS	27
5	TX G IN		G OUT	26
6	(B-Y) IN	G	FILTER	25
7	TX B IN		FILTER	24
8	GND		G SONS	23
9	TX CONT		B OUT	22
10	TX BRT	B	FILTER	21
11	GATEPULSE		FILTER	20
12	YS		B SENS	19
13	YM		V BLK	18
14	Y IN		MUTE	17
15	S IN		S OUT	16

IC101
TA7660PFA-1

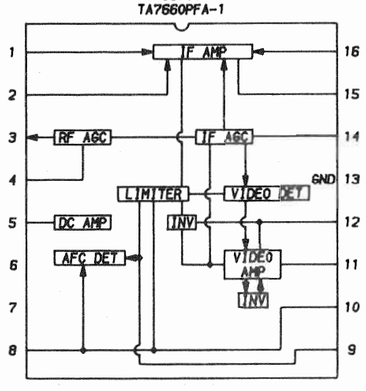

IC501
TA7644BP

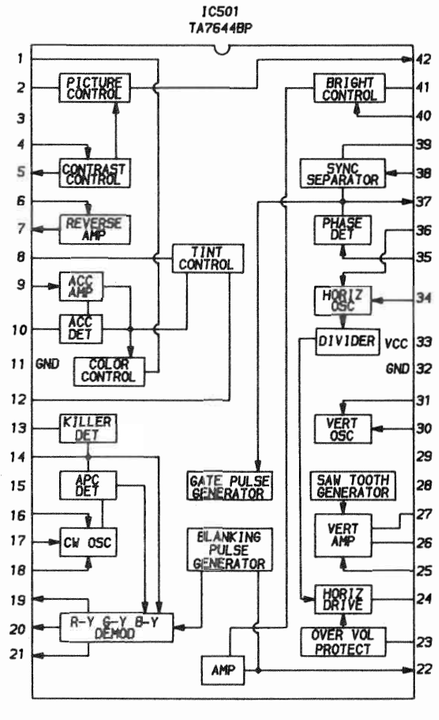

IC301
AN5515

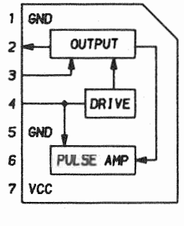

ICA01 CHANNEL SELECTOR
TMP47C432N-8857

1	PB		VDD 42
2	MUTE		AFC 41
3	VOL		PLL CLK 40
4	M/S		PLL DATA 39
5	BV/BU		AC IN 38
6	SW1		RMT 37
7	EXT A		SYNC 36
8	EXT B		PLL LOAD 35
9	KEY OUT		HOLD 34
10	KEY OUT		$\overline{RST}$ 33
11			X-OUT 32
12			X-IN 31
13	SW2		GND 30
14	RELAY	KEY-IN	K3 29
15	RGB A		K2 28
16	RGB B		K1 27
17	MNOS $\overline{LD}$		K0 26
18	KEY OUT		KEY OUT 25
19	OSC R		OSC DATA 24
20	OSC G		OSD CLK 23
21	GND		OSC STB 22

ICA01 SELECTOR
TMP47405702

1	BU/BV		VHH 42
2	SW 1	PLL	41
3	SW 2		40
4			39
5	H OSC STOP	RMT	38
6	AV MODE		37
7	Y BLANK	AFT	36
8	RELAY		35
9	V CK	VHH	34
10	V DATA	RST	33
11	SYNC		32
12	GND	IN/OUT	31
13	M/S	TEST	30
14			29
15		KEY IN	28
16	DIGIT 2		27
17	DIGIT 1		26
18			25
19			24
20			23
21	GND		22

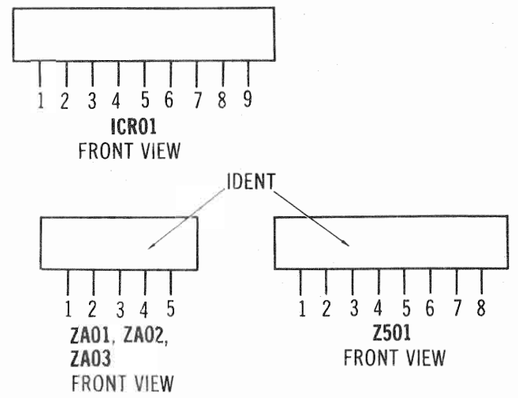

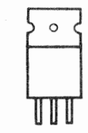

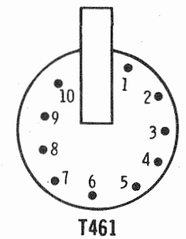

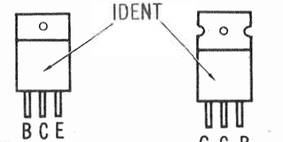

TOSHIBA MODELS
C1414M,CX414C,CX1414

FOLDER 2

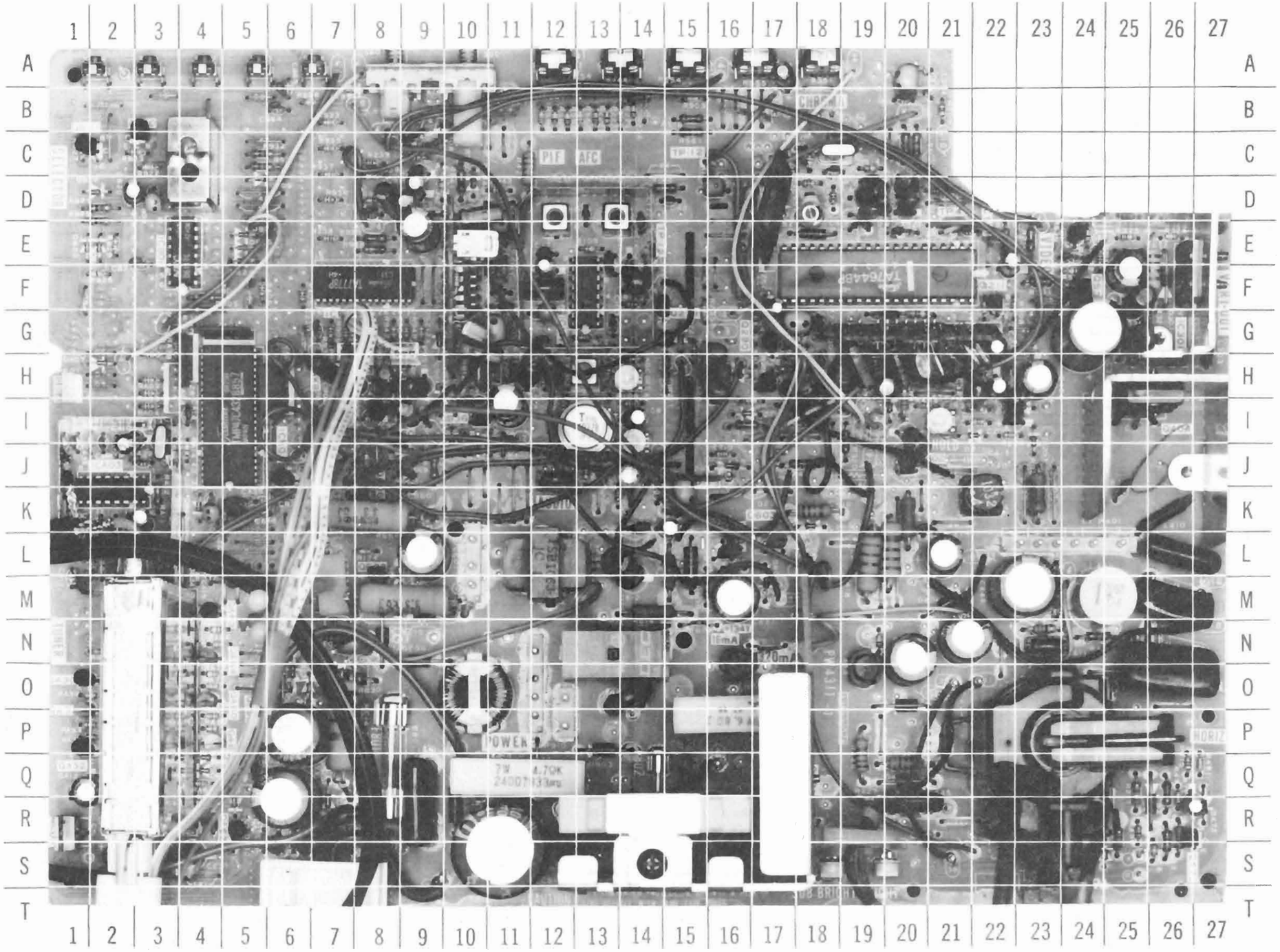

A Howard W. Sams GRIDTRACE™ Photo

MAIN BOARD GridTrace LOCATION GUIDE

C063	S-2	C615	I-11	D491	I-20	P950	G-7	R235	G-15	R536	E-24	RA66	N-4	XA01	I-3
C065	E-14	C617	L-16	D510*	E-17	P951	G-9	R236	B-14	R554	A-15	RA67	N-4	Z101	I-13
C102	H-12	C618	K-14	D602	M-17	PR01	H-1	R237	S-18	R555	A-17	RA70	M-6	Z141	E-11
C103	G-13	C621	M-16	D801	S-14	Q211	F-22	R238	E-7	R561	B-15	RA71	O-4	Z501	E-17
C104	H-12	C801	Q-9	D802	Q-12	Q221	F-15	R239	C-8	R563	B-13	RA72	O-4	Z601	H-10
C105	H-12	C802	S-13	D803	Q-13	Q270	H-17	R254	A-12	R564	B-12	RA79	G-3	ZA01	H-6
C108	I-14	C804	S-13	D804	S-12	Q271	H-17	R255	A-14	R568	B-12	RB05	F-4	ZA02	G-5
C109	G-12	C807	R-16	D806	Q-17	Q290	G-17	R257	S-18	R569	B-12	RB06	F-4	ZA03	G-4
C110	F-12	C810	S-12	D817	S-16	Q402	J-20	R270	I-16	R601	H-11	RB14	K-7		
C113	F-11	C901	I-9	D905	H-8	Q404	H-26	R271	I-16	R609	M-15	RB21	D-2		
C114	G-11	C904	I-8	D906	H-9	Q471	R-27	R272	H-18	R610	L-16	RB22	C-3		
C141	C-16	C905	H-8	D907	G-9	Q531	F-24	R281	A-12	R612	H-10	RB23	C-3		
C142	D-15	C906	H-7	D908	B-10	Q532	E-24	R291	G-17	R614	M-14	RB24	C-9		
C171	E-14	C915	E-9	D909	D-6	Q603	L-17	R292	G-17	R616	L-15	RB25	D-2		
C172	E-12	C916	D-8	DA07	H-2	Q604	L-16	R293	H-17	R617	I-10	RB26	F-2		
C175	J-14	C917	D-9	DA09	A-7	Q801	Q-18	R294	H-17	R618	F-11	RB27	C-1		
C176	F-14	C918	D-9	DA60	Q-4	Q803	R-16	R301	I-22	R801	Q-17	RB28	B-6		
C177	E-13	C921	I-9	DA61	Q-4	QA30	O-1	R303	G-21	R802	R-15	RB29	E-2		
C178	D-13	C922	H-8	DB20	E-1	QA31	O-1	R304	E-24	R803	S-16	RB30	O-8		
C200	E-24	C924	D-8	DB21	E-2	QA32	P-1	R308	I-19	R805	R-10	RB31	M-5		
C203	B-20	CA10	I-2	DB22	D-2	QA60	O-4	R309	H-19	R808	O-14	RB32	N-2		
C205	D-20	CA11	M-1	DB23	K-4	QA61	P-4	R315	S-19	R810	Q-11	RB35	G-4		
C206	G-22	CA12	Q-1	DB24	E-5	QA62	R-4	R319	G-20	R811	R-14	RB38	J-9		
C207	A-17	CA13	I-3	DB25	E-5	QA63	M-4	R320	J-19	R812	P-16	RB39	J-11		
C209	I-23	CA14	I-4	DB26	E-5	QA64	N-4	R323	F-25	R814	Q-15	RB42	J-11		
C220	G-7	CA15	L-4	DB30	Q-5	QB06	J-8	R324	E-26	R903	B-15	RB61	L-2		
C270	H-19	CA30	K-3	DB31	Q-6	QB19	L-3	R325	E-25	R904	G-9	RB62	M-6		
C301	H-22	CA31	K-2	DB32	G-9	QB20	C-3	R326	G-20	R905	G-8	RB63	K-8		
C303	H-22	CA32	J-3	DB33	J-10	QB21	C-2	R327	Q-20	R906	G-7	RB64	K-8		
C306	G-19	CA33	K-3	DB34	L-3	QB35	J-6	R336	K-23	R928	E-8	RB66	K-5		
C308	G-18	CA34	O-2	DE01	N-7	QB36	I-10	R337	I-22	R929	E-8	RB67	N-6		
C311	L-21	CA35	P-2	DE02	N-8	QB60	J-9	R345	F-26	R931	G-7	RB68	L-2		
C312	F-24	CA36*	I-3	DE03	M-6	QE02	S-6	R351	A-18	R932	C-6	RB69	J-9		
C313	E-27	CA37	K-2	DE04	M-9	QE03	S-6	R352	S-20	R933	B-7	RB70	J-10		
C321	H-22	CA38	K-5	DE12	R-7	QE07	R-1	R401	G-20	R934	C-6	RB71	J-6		
C322	H-22	CA39	I-1	DE30	R-5	QE08	L-8	R402	R-25	R935	C-7	RB77	M-7		
C324	G-25	CA42	N-2	DE35	O-6	QE35	P-5	R406	I-20	R936	D-7	RE01	M-9		
C326	F-25	CA48	I-2	DE36	N-9	R062	S-2	R411	J-18	R937	C-7	RE05	S-6		
C327	G-25	CA78	K-5	F801	P-8	R101	G-13	R413	M-15	R938	D-8	RE06	S-5		
C328	F-27	CB20	D-2	F802	Q-14	R105	E-13	R416	L-20	R939	C-8	RE07	R-7		
C402	I-20	CB21	E-3	IC101	F-13	R106	I-14	R418	L-19	R941	D-10	RE08	T-6		
C408	H-20	CB22	C-4	IC301	F-26	R107	H-14	R421	C-11	R942	D-11	RE09	L-8		
C417	K-21	CB23	D-4	IC501	F-19	R108	F-11	R430	R-20	R945	C-9	RE10	M-9		
C418	H-18	CB25	K-6	IC901	F-7	R141	F-11	R434	F-9	R946	G-7	RE13	P-7		
C424	H-23	CB50	C-4	ICA01	I-5	R144	D-14	R441	N-25	R947	G-8	RE14	P-7		
C440	M-26	CB60	K-9	ICA03	K-3	R152	H-14	R443	N-23	R948	G-9	RE17	K-8		
C441	L-26	CB61	J-9	ICB01	E-4	R158	I-14	R444	M-23	RA01	H-3	RE30	M-6		
C442	O-26	CB64	B-6	L061	S-3	R161	J-13	R448	Q-19	RA02	H-3	RE36	O-6		
C445	R-20	CB65	A-6	L101	J-12	R170	H-13	R449	K-18	RA03	H-3	RE37	P-5		
C446	N-21	CE01	L-9	L102	H-13	R172	F-14	R451	I-21	RA04	I-3	S501	C-18		
C448	M-23	CE02	R-2	L103	D-13	R173	F-14	R472	Q-26	RA05	F-6	SA01	A-3		
C449	N-20	CE05	N-8	L105	G-11	R174	L-8	R475	Q-26	RA06	F-5	SA02	A-4		
C463	K-25	CE08	P-6	L106	F-12	R175	L-2	R476	R-26	RA11	K-3	SA03	A-5		
C464	G-19	CE12	Q-6	L141	E-11	R202	D-10	R477	S-26	RA12	K-3	SA04	A-7		
C471	R-27	CE31	S-4	L142	G-12	R203	B-21	R478	R-26	RA13	K-3	SA06	A-2		
C473	F-17	D201	D-9	L143	D-16	R204	D-21	R480	R-25	RA14	J-4	SB01	A-8		
C501	K-14	D204	I-22	L171	D-12	R205	C-20	R481	Q-27	RA15	J-2	SR81	N-12		
C502	E-20	D207	S-24	L204	A-20	R208	F-23	R482	R-26	RA30	K-2	T401	J-22		
C503	D-20	D209	K-17	L302	G-27	R210	F-22	R495	I-20	RA31	L-2	T461	P-24		
C504	E-21	D220	I-33	L410	K-26	R211	H-15	R496	K-20	RA32	O-1	T661	L-12		
C505	D-20	D221	G-15	L411	N-23	R213	G-17	R501	K-14	RA33	P-1	T801	N-10		
C506	E-19	D290	K-18	L418	G-18	R214	G-23	R502	E-20	RA34	P-1	TP5	F-13		
C509	C-18	D291	I-16	L441	M-25	R216	E-22	R507	D-18	RA35	Q-2	TP6	F-13		
C510	C-18	D292	H-16	L444	O-19	R217	Q-25	R514	C-19	RA36	P-2	TPii	F-12		
C514	D-19	D293	J-16	L501	K-15	R218	N-19	R516	B-15	RA37	R-2	TP14	F-12		
C515	D-19	D294	D-10	L801	O-16	R219	J-16	R517	E-22	RA38	R-2	TP42	E-19		
C516	D-19	D301	F-26	LA01	K-4	R220	C-10	R518	C-20	RA39	Q-2	TP106	E-20		
C517	E-24	D302	O-20	LB01	C-4	R221	G-15	R525	C-18	RA40	J-8	TP101	E-19		
C521	D-17	D303*	F-18	LB02	D-4	R222	B-13	R526	D-18	RA60	J-7	TP102	E-21		
C550	D-18	D311	I-22	P001	L-10	R223	B-13	R527	E-18	RA61	P-4	TPA	J-12		
C601	H-11	D406	M-21	P401	L-25	R224	B-14	R531	F-23	RA62	P-4	TPC	F-14		
C603	I-10	D408	Q-20	P402	G-20	R226	I-22	R532	E-24	RA63	Q-4	TPD	F-14		
C609	K-15	D471	R-26	P891	N-12	R227	R-19	R534	F-24	RA64	Q-4	X201	H-16		
C612	M-14	D472	R-27	P910	P-12	R229	G-22	R535	F-24	RA65	J-7	X501	C-18		

* Located on other side of board.

CB50
TPA
AFC
R158
AGC
R152
TP14
TP11
TP5
L171
TP6
L103
TPC
TPD
SUB
BRIGHT
R257
C251
TP101
TP42
TP100
TP102
HORIZ
HOLD
R451

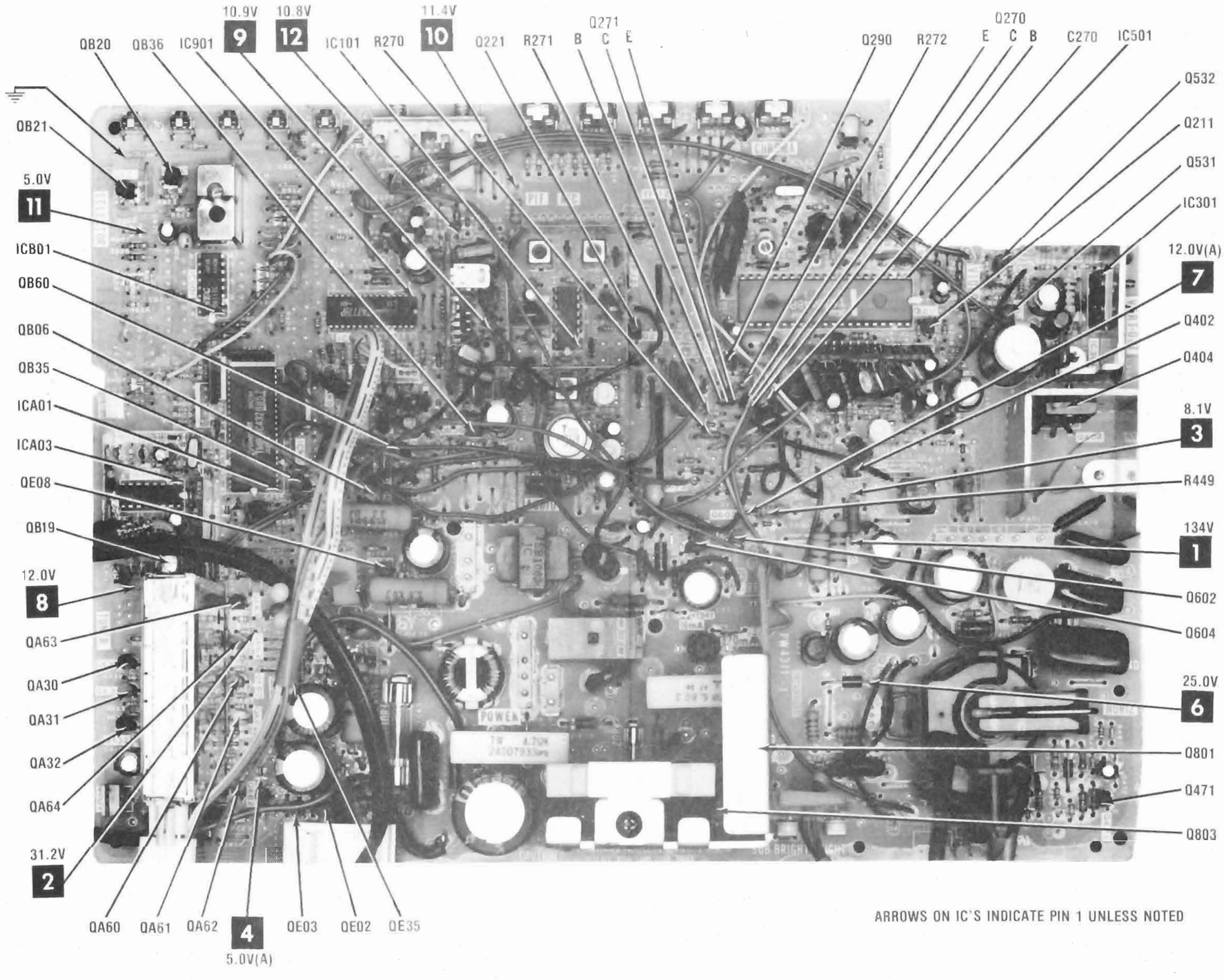

ARROWS ON IC'S INDICATE PIN 1 UNLESS NOTED

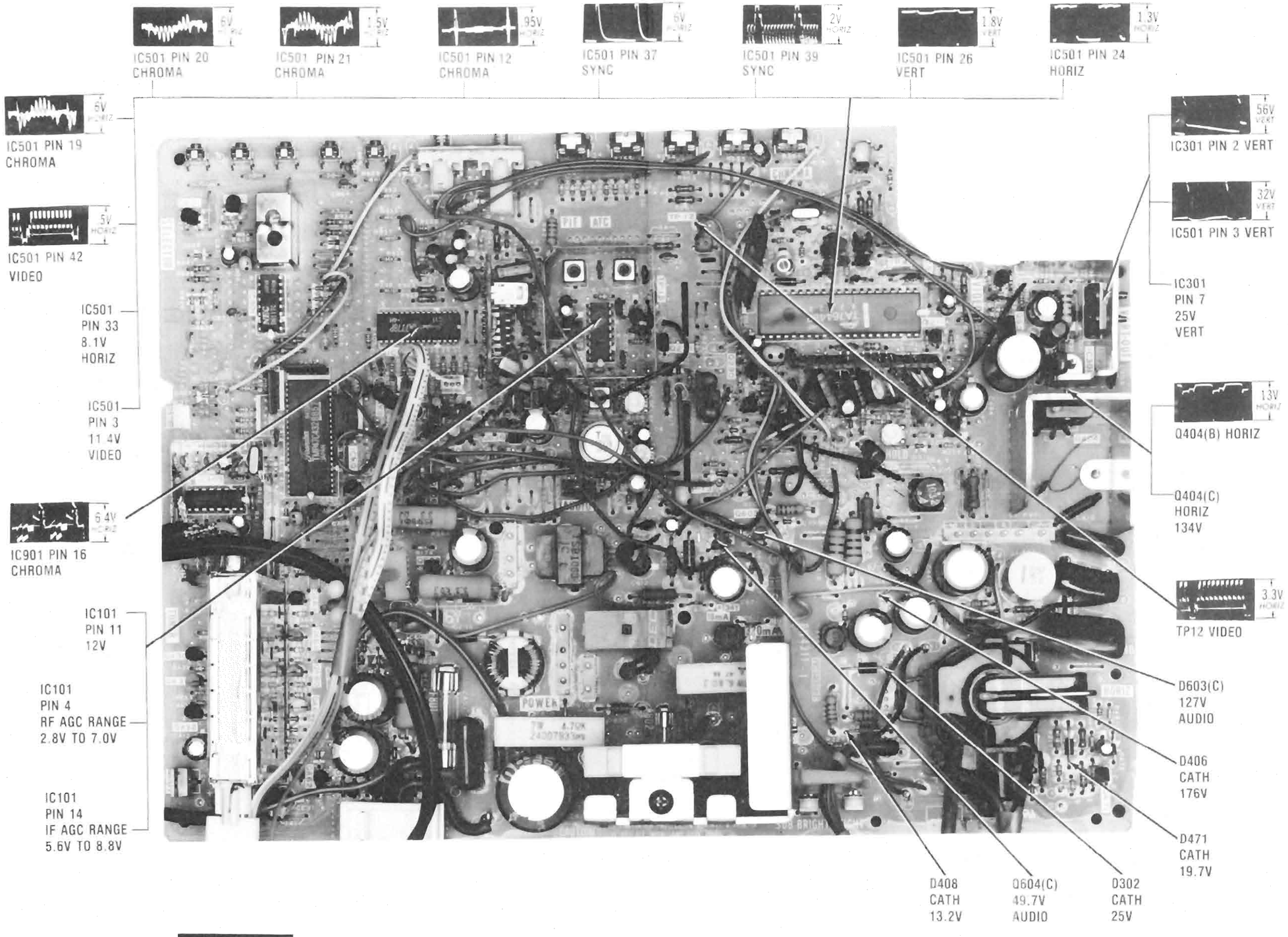
6V HORIZ
IC501 PIN 20 CHROMA
1.5V HORIZ
IC501 PIN 21 CHROMA
.95V HORIZ
IC501 PIN 12 CHROMA
6V HORIZ
IC501 PIN 37 SYNC
2V HORIZ
IC501 PIN 39 SYNC
1.8V VERT
IC501 PIN 26 VERT
1.3V HORIZ
IC501 PIN 24 HORIZ
6V HORIZ
IC501 PIN 19 CHROMA
.5V HORIZ
IC501 PIN 42 VIDEO
IC501 PIN 33 8.1V HORIZ
IC501 PIN 3 11.4V VIDEO
6.4V HORIZ
IC901 PIN 16 CHROMA
IC101 PIN 11 12V
IC101 PIN 4 RF AGC RANGE 2.8V TO 7.0V
IC101 PIN 14 IF AGC RANGE 5.6V TO 8.8V
56V VERT
IC301 PIN 2 VERT
32V VERT
IC501 PIN 3 VERT
IC301 PIN 7 25V VERT
13V HORIZ
Q404(B) HORIZ
Q404(C) HORIZ 134V
3.3V HORIZ
TP12 VIDEO
D603(C) 127V AUDIO
D406 CATH 176V
D471 CATH 19.7V
D408 CATH 13.2V
Q604(C) 49.7V AUDIO
D302 CATH 25V

CRT BOARD GridTrace LOCATION GUIDE

C902	B-9	R911	C-12
C903	A-6	R912	J-10
C907	G-12	R913	G-11
C908	C-13	R914	C-12
C909	J-6	R915	I-4
C910	G-11	R916	J-12
C911	C-11	R917	A-10
C912	G-2	R918	K-7
C990	E-11	R919	G-10
D922	H-11	R920	I-5
D923	B-12	R921	I-5
D924	J-6	R922	G-10
Q902	I-13	R923	D-10
Q903	A-13	R924	H-3
Q904	J-4	R925	J-8
Q905	I-11	R927	D-11
Q906	A-11	R960	K-9
Q907	J-2	R961	A-7
Q908	J-11	R962	F-1
Q909	A-10	R970	I-10
Q910	J-2	R971	A-12
R907	F-11	R972	I-2
R908	D-12	R990	E-12
R909	J-7	TP90	A-9
R910	G-12		

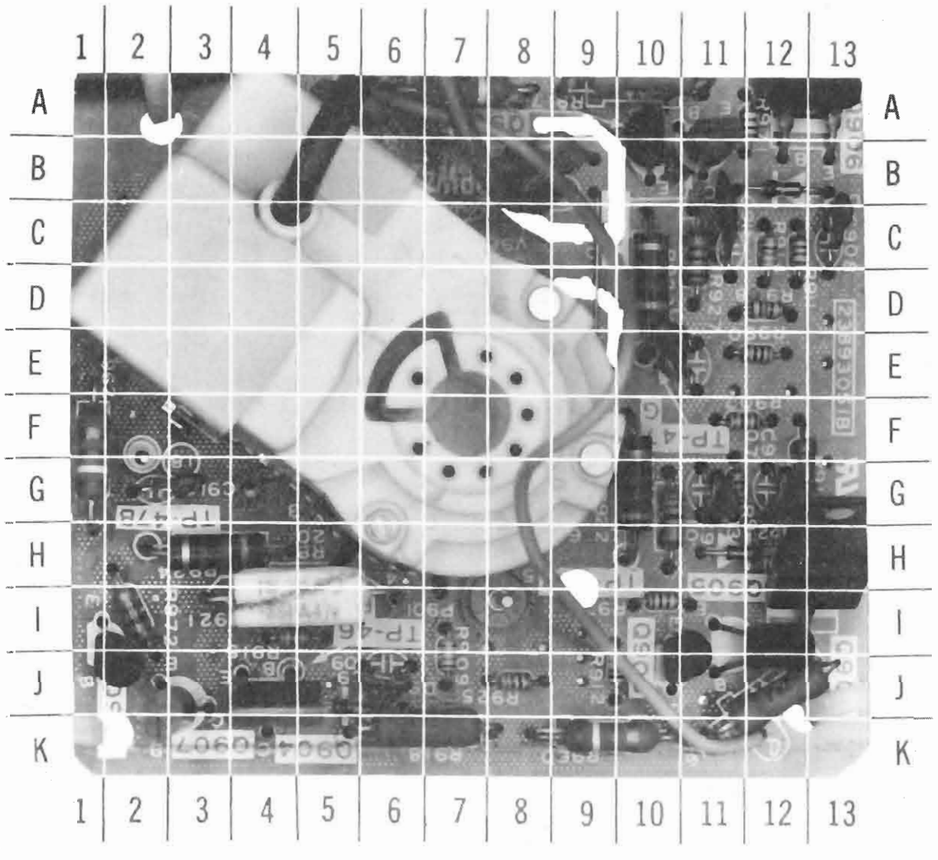

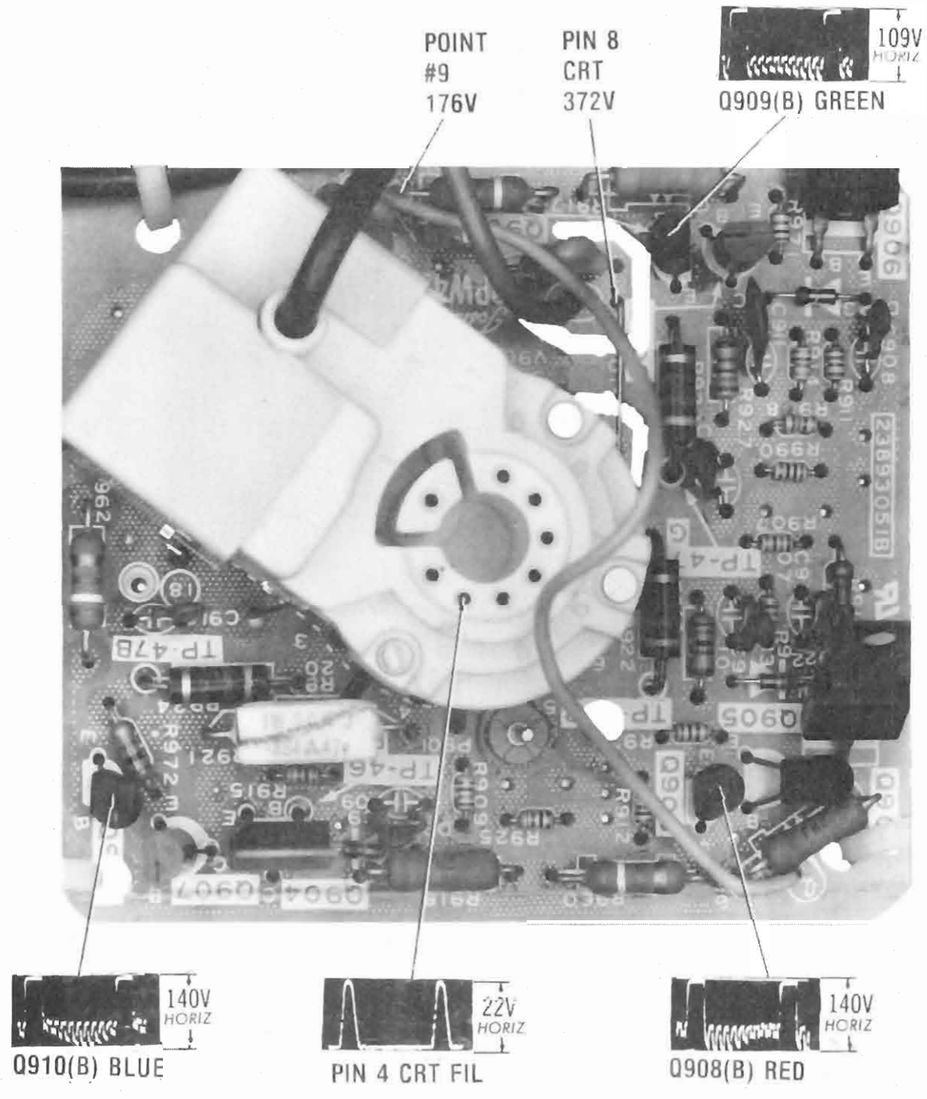

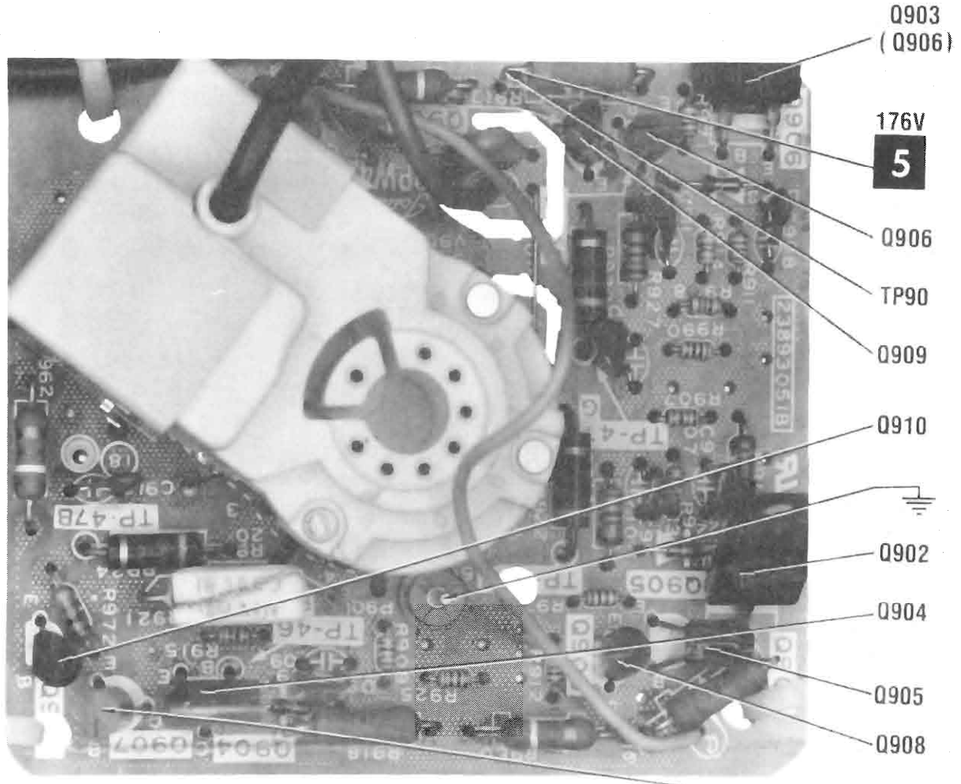
Q903
(Q906)
176V
5
Q906
TP90
Q909
Q910
Q902
Q904
Q905
Q908
Q907

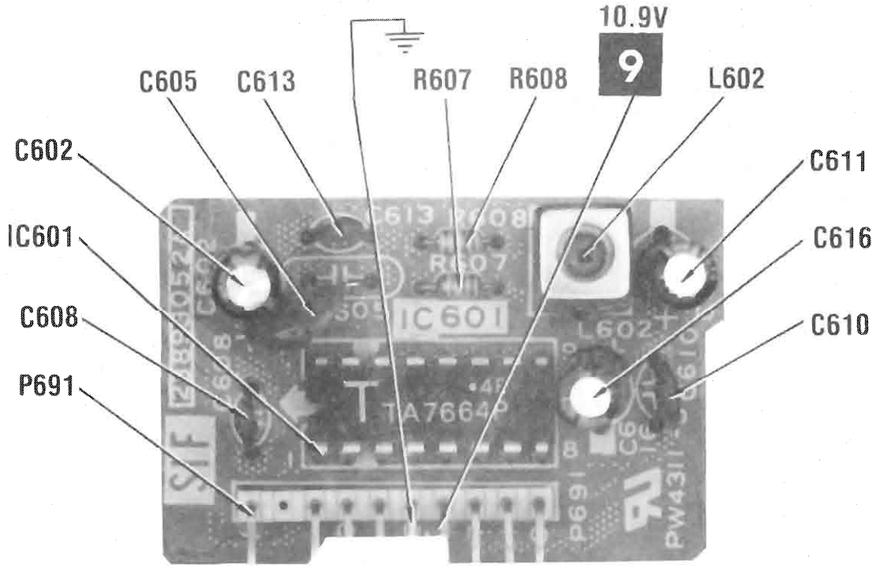
10.9V
9
C605
C613
R607
R608
L602
C602
C611
IC601
C616
C608
C610
P691
IC601
TA7664P

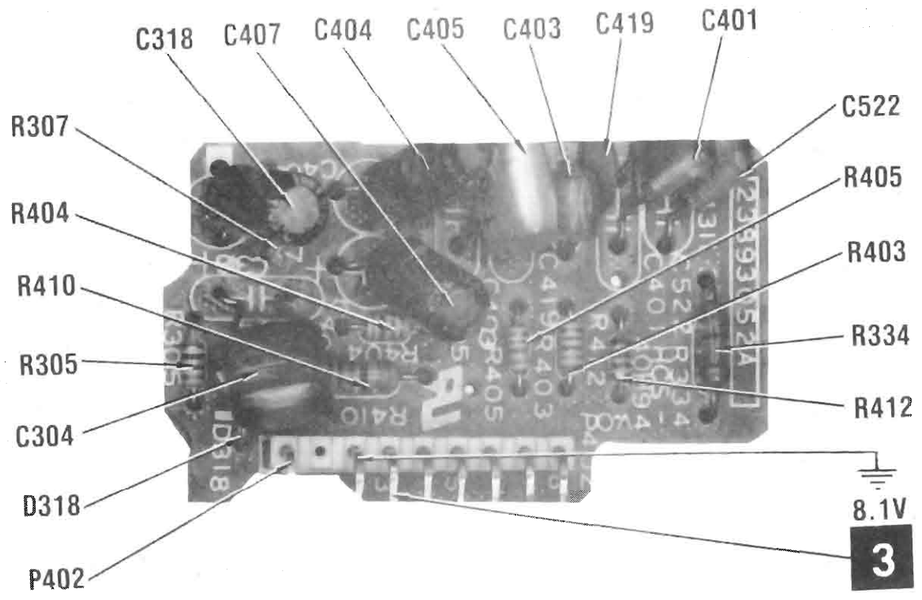
C318
C407
C404
C405
C403
C419
C401
C522
R307
R405
R404
R403
R410
R334
R305
R412
C304
8.1V
D318
3
P402

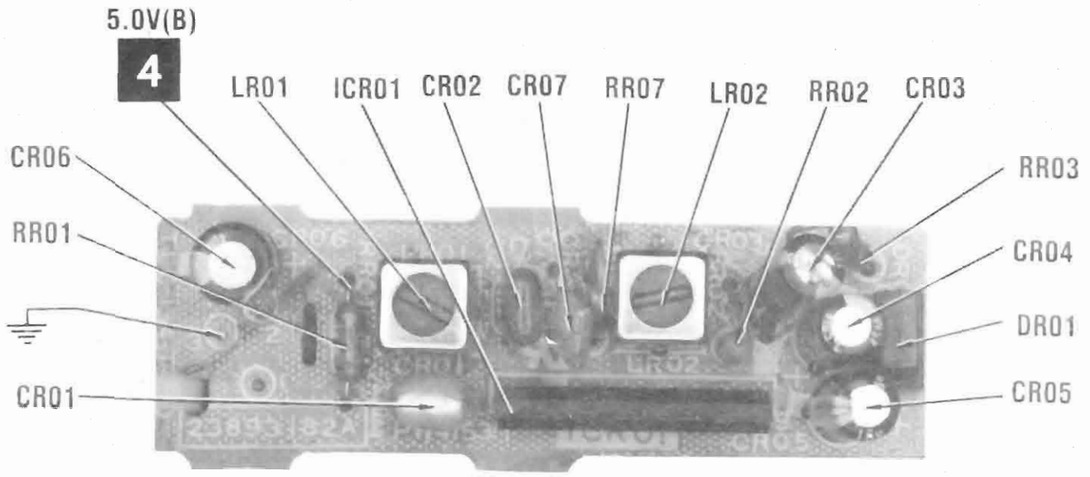

NOTE: ARROWS ON IC'S INDICATE PIN 1 UNLESS NOTED

PARTS LIST AND DESCRIPTION

When ordering parts, state Model, Part Number, and Description

SEMICONDUCTORS (Select replacement transistor for best results)

ITEM No.	TYPE No.	MFGR. PART No.	REPLACEMENT DATA					
			NOTES	NTE PART No.	ECG PART No.	RCA PART No.	WORKMAN PART No.	ZENITH PART No.
D201	1SS176	A7150258		NTE519	ECG519	SK3100/519	WEP925/519	103-131
D204	1SS178	A7150351		NTE519	ECG519	SK3100/519	WEP925/519	103-131
D206	1SS176	A7150258	(1)	NTE519	ECG519	SK3100/519	WEP925/519	103-131
D207	1SS176	A7150258		NTE519	ECG519	SK3100/519	WEP925/519	103-131
D209	1S1555	A7246711		NTE177	ECG177	SK9091/177	WEP1062/177	103-131
D220	1SS176	A7150258		NTE519	ECG519	SK3100/519	WEP925/519	103-131
D221	1SS176	A7150258		NTE519	ECG519	SK3100/519	WEP925/519	103-131
D290	1SS176	A7150258		NTE519	ECG519	SK3100/519	WEP925/519	103-131
D291	1SS176	A7150258		NTE519	ECG519	SK3100/519	WEP925/519	103-131
D292	1SS176	A7150258		NTE519	ECG519	SK3100/519	WEP925/519	103-131
D293	05Z5.6X	A7110016		NTE5011A	ECG5011A	SK5A6/5011A	WEP1412/5011	103-Z9007
D294	1SS176	A7150258		NTE519	ECG519	SK3100/519	WEP925/519	103-131
D301	ERB12-01RK	23115532		NTE116	ECG116	SK3311	WEP156	212-76-02
D302	S5295G	A7978850		NTE552	ECG552	SK9000/552	WEP172/506	103-287
D303	6.8Z(Zener)			NTE5014A	ECG5014A	SK6A8/5014A	WEP1415/5014	103-Z9009
D311	1SS176	A7150258		NTE519	ECG519	SK3100/519	WEP925/519	103-131
D318	1SS176	A7150258		NTE519	ECG519	SK3100/519	WEP925/519	103-131
D406	S5295G	A7978850		NTE552	ECG552	SK9000/552	WEP172/506	103-287
D408	1S1834	A7568250		NTE552	ECG552	SK9000/552	WEP172/506	103-287
D471	TVR-1B	A7568460		NTE552	ECG552	SK9000/552	WEP172/506	103-287
D472	RD6.2EFA-1	23115774		NTE5013A	ECG5013A	SK6A2/5013A	WEP1414/5013	103-Z9008
D491	1SS176	A7150258		NTE519	ECG519	SK3100/519	WEP925/519	103-131
D502	1S1555	A7246711	(1)	NTE177	ECG177	SK9091/177	WEP1062/177	103-131
D510				NTE177	ECG177	SK9091/177	WEP1062/177	103-131
D602	1SS178	A7150351		NTE519	ECG519	SK3100/519	WEP925/519	103-131
D801 thru D804	1S1887AFA-1	A7568754		NTE116	ECG116	SK3312	WEP157	212-76-02
D806	1SS176	A7150258		NTE519	ECG519	SK3100/519	WEP925/519	103-131
D817	05Z20Y	A7110634		NTE5029A	ECG5029A	SK20A/5029A	WEP1431/5029	103-Z9023
D905 thru D907	05Z12X	A7110410		NTE5021A	ECG5021A	SK12A/5021A	WEP1423/5021	103-279-21
	05Z12Y	A7110411		NTE5021A	ECG5021A	SK12A/5021A	WEP1423/5021	103-279-21
	05Z12Z	A7110412		NTE5021A	ECG5021A	SK12A/5021A	WEP1423/5021	103-279-21

PARTS LIST AND DESCRIPTION (Continued)

When ordering parts, state Model, Part Number, and Description

SEMICONDUCTORS (Select replacement transistor for best results)

ITEM No.	TYPE No.	MFGR. PART No.	NOTES	REPLACEMENT DATA		
				NTE PART No.	ECG PART No.	RCA PART No.	WORKMAN PART No.	ZENITH PART No.
D908	1SS176	A7150258		NTE519	ECG519	SK3100/519	WEP925/519	103-131
D909	1S1555	A7246711		NTE177	ECG177	SK9091/177	WEP1062/177	103-131
D922 thru	1S1555	A7246711		NTE177	ECG177	SK9091/177	WEP1062/177	103-131
D924								
DA07	1SS176	A7150258		NTE519	ECG519	SK3100/519	WEP925/519	103-131
DA09	1SS176	A7150258		NTE519	ECG519	SK3100/519	WEP925/519	103-131
DA60,61	1SS176	A7150258		NTE519	ECG519	SK3100/519	WEP925/519	103-131
DB20 thru	1SS176	A7150258		NTE519	ECG519	SK3100/519	WEP925/519	103-131
DB26								
DB30 thru	1SS176	A7150258		NTE519	ECG519	SK3100/519	WEP925/519	103-131
DB33								
DB34	1S1555	A7246711		NTE177	ECG177	SK9091/177	WEP1062/177	103-131
DE01	1S1887A	A7568752		NTE116	ECG116	SK3312	WEP157	212-76-02
DE02	1S1887	A7568719		NTE116	ECG116	SK3312	WEP157	212-76-02
DE03	1S1555	A7246711		NTE177	ECG177	SK9091/177	WEP1062/177	103-131
DE04	1S1887	A7568719		NTE116	ECG116	SK3312	WEP157	212-76-02
DE12	05Z5.1X	A7110040		NTE5010A	ECG5010A	SK5A1/5010A	WEP1411/5010	103-279-10
	05Z5.1Y	A7110041		NTE5010A	ECG5010A	SK5A1/5010A	WEP1411/5010	103-279-10
DE30	U574			NTE615P	ECG615A	SK9179/615A	WEP615/615	905-190
	uPC574J	23115922		NTE615P	ECG615A	SK9179/615A	WEP615/615	905-190
	uPC574JC	23115878		NTE615P	ECG615A	SK9179/615A	WEP615/615	905-190
DE35	05Z4.3Y	A7109433		NTE5008A	ECG5008A	SK4A3/5008A	WEP1408/5008	103-279-08
DE36	1S1887A	A7568752		NTE116	ECG116	SK3312	WEP157	212-76-02
IC101	TA7660P	B0356602						
	TA7660P(FA-1)							
IC301	AN5515	23119548						
IC501	TA7644BP	B0356446		NTE1547	ECG1547	SK7676/1547		
IC601	TA7664P	B0355640		NTE1573	ECG1573	SK7678/1573		
	TA7664P(FA-1)	B0356641		NTE1573	ECG1573	SK7678/1573		
IC901	TA7778P							
	TA7763P	B0358130						

PARTS LIST AND DESCRIPTION (Continued)

When ordering parts, state Model, Part Number, and Description

SPEAKER

ITEM No.	TYPE	REPLACEMENT DATA		NOTES
		MFGR. PART No.	QUAM PART No.	
W661	2 1/4" X 2 3/4" PM 8 Ohm	23151396		1 Watt

MISCELLANEOUS

ITEM No.	PART NAME	MFGR. PART No.	NOTES
DR01	Diode	23115800 or A8652035	Photo
L302	Ferrite Bead	23261974	
L410	Ferrite Bead	23261974	
# L901	Degaussing Coil	23200820	
# P801	Cord	23176804	Power
S501	Switch	23145558	ABC
SA01	Switch	23145580	CH-UP
SA02	Switch	23145580	CH-DN
SA03	Switch	23145580	VOL-UP
SA04	Switch	23145580	VOL-DN
SA06	Switch	23145580	Power
SB01	Switch	23145558	CATV Select
# SR81	Relay	23146963	Power
# V901	CRT	A36JAR50X03	
X201	Delay Line	23250938	
X501	Crystal	23153961	3.58MHz
XA01	Crystal	23153969	4MHz
Z101	Filter	A5610690	SAW
Z141	Filter	23107976	Ceramic, 4.5MHz
Z501	Network	23234990	Capacitor - Resistor 270pF X 3, 3100 ohm X 6
Z501	Filter	23107980	Ceramic, 4.5MHz
ZA01	Network	24094681	Capacitor, 2200pF X 4
ZA02	Network	24094681	Capacitor, 2200pF X 4
ZA03	Network	24094834	Capacitor, 220pF X 4
ZA04	Network	24094742	Capacitor, 1000pF X 4
	Antenna	23122497	VHF, RUSSELL Replacement Assembly POR-12H RUSSELL Replacement Rod SIM-4H
	Antenna	23124970	UHF, RUSSELL Replacement BOW-4H
	Magnet Assembly	23102983	Purity/Convergence
#	Socket	23116543	CRT
	Transmitter	23120817	Remote Control, CT989
#	Tuner	23121786	EL621F
	PC Board	23158030	CRT
	PC Board	23158033	Main
	PC Board	23158032	H-SYNC
	PC Board	23158031	SIF
	PC Board	23158277	Remote Sensor
	PC Board	23158950	Earphone

For SAFETY use only equivalent replacement part.

CABINETS & CABINET PARTS (When ordering specify model, chassis & color)

ITEM	PART No.
Cabinet Back	23990926
Cabinet Front (CX1414)	23807767
Cabinet Front (C1414M)	23807689
Cabinet Front (CX414C)	23807690

ITEM	PART No.
Case, Remote Control	23832448
Door	23990915
Key Botton (5 keys)	23874597
Key Botton	23874758

WIRING DATA

High Voltage Lead	Use BELDEN No.	9867 (30 KV)
Shielded Hook-up Wire	Use BELDEN No.	8401 or 8421 (Single-Conductor) 8208 (Two-Conductor)
General-use Unshielded Hook-up Wire	Use BELDEN No.	8529 (Solid) Available in 13 Colors 8522 (Stranded) Available in 13 Colors
300-Ohm Tuner Input Lead	Use BELDEN No.	8225
75-Ohm Tuner Input Lead	Use BELDEN No.	8241
300-Ohm Antenna Lead-In	Use BELDEN No.	8275 (Foam Core) or 8285 (Foam Jacketed)
Antenna Rotor Cable	Use BELDEN No.	8464 (Flat) or 8484 (Round) 4-Conductor 8485 (Round) 5-Conductor 8488 (Round) 8-Conductor

PARTS LIST AND DESCRIPTION (Continued)

When ordering parts, state Model, Part Number, and Description

COILS (RF-IF)

ITEM No.	FUNCTION	MFGR. PART No.
L061	RF Choke	23221026
L101	Choke	23262951
L102	PIF	23262828
L103	PIF	23262827
L105	Peaking	23237933
L106	RF Choke	23261052
L141	Peaking	23283150
L142	Peaking	23238934
L143	Peaking	23237984
L171	PIF	23262827
L204	Peaking	23283470
L411	RF Choke	23221998

ITEM No.	FUNCTION	MFGR. PART No.
L418	Peaking	23284109
L441	Linearity	23222672
L444	RF Choke	23221026
L501	Peaking	23283300
L602	SIF	23252930
L801	RF Choke	23221026
LA01	Peaking	23238934
LB01	Peaking	23237981
LB02	Peaking	23238934
LR01	Peaking	23232963
LR02	Peaking	23232963

CONTROLS (All wattages 1/2 watt, or less, unless listed)

ITEM NO.	FUNCTION	RESISTANCE	MFGR. PART NO.	NOTES
R152	AGC Delay	500Ω	24066927	
R158	AFC	500K	24066921	
R254	Contrast	10K	24063805	
R255	Brightness	10K Detent @ 50%	24069821	
R257	Sub Brightness	2000	24066915	
R351	Vert Hold	200K	24063801	
R352	Height	10K	24066913	
R451	Horiz Hold	10K	24066926	
R554	Tint	10K	24063805	
R555	Color	10K	24063805	
# R556	Focus		(1)	
# R557	Screen		(1)	

For SAFETY use only equivalent replacement part.
(1) Part of Horizontal Output Transformer #T461, Part Number 23226412

COILS & TRANSFORMERS

ITEM No.	FUNCTION	MFGR. PART No.	OTHER IDENTIFICATION	NOTES
# L462	Yoke Horiz 4.06mH Vert 20.4mH	23227547	TY-15HD2N	
T401	Horiz Drive	23224988	1032	
# T461	Horiz Output	23226412	TFB4030AD	
# T661	Audio Output	23216941	TSP1063	
# T801	Line Filter	23211982	TRF3104C	

For SAFETY use only equivalent replacement part.
(1) Number on unit.

FUSE DEVICES

ITEM NO.	DESCRIPTION	MFGR. PART NO. DEVICE	MFGR. PART NO. HOLDER	NOTES
# F801	3 Amp @ 250V Fast Acting	23144942	23165081 (1)	
# F802	1.2 Amp @ 125V Fast Acting	23144911	23144911 (1)	

For SAFETY use only equivalent replacement part.
(1) Two used for each fuse.

PARTS LIST AND DESCRIPTION (Continued)

When ordering parts, state Model, Part Number, and Description

SEMICONDUCTORS (Select replacement transistor for best results)

ITEM No.	TYPE No.	MFGR. PART No.	NOTES	REPLACEMENT DATA: NTE PART No.	ECG PART No.	RCA PART No.	WORKMAN PART No.	ZENITH PART No.
IC A01	TMP47C4328857 TMP47C432N-8857	B04106802X						
ICA03	TD6350P TD6312P	B0272490 B0272120						
ICB01	D6117C MPD6117C	23119664						
ICR01	C1474HA uPC1474HA	23119566						
Q211	2SC1815Y	A6317547		NTE85	ECG85	SK3124A/289A	WEP66/199	121-Z9065
Q221	2SC1815-Y 2SA1015Y			NTE85 NTE290A	ECG85 ECG290A	SK3124A/289A SK9132	WEP66/199 WEP911/290A	121-Z9065 121-Z9003*
Q270	2SA1015-Y (2S)A1015Y	A6534045		NTE290A NTE290A	ECG290A ECG290A	SK9132 SK9132	WEP911/290A WEP911/290A	121-Z9003* 121-Z9003*
Q271 Q290	(2S)C1815Y 2SA562-O	A6509121		NTE85 NTE290A	ECG85 ECG290A	SK3124A/289A SK3114A/290A	WEP66/199 WEP911/290A	121-Z9065 121-Z9003*
	2SA562TM-O 2SA562TM-Y	A6509141		NTE290A NTE290A	ECG290A ECG290A	SK3114A/290A SK3114A/290A	WEP911/290A WEP911/290A	121-Z9003* 121-Z9003*
Q402	2SC2482	A63300004		NTE399	ECG399	SK9352/399	WEP63/287*	121-Z9045*
# Q404	2SC2482F-1 2SD1426	A6868654		NTE399 NTE2302	ECG399 ECG2302	SK9352/399 SK9422	WEP63/287* WEP911/290A	121-Z9045* 121-Z9003*
Q471 Q531,532	2SA1015-O 2SC1815Y	A6534021		NTE290A NTE85	ECG290A ECG85	SK9132 SK3124A/289A	WEP911/290A WEP66/199	121-Z9003* 121-Z9065
	2SC1815-Y	A6317547		NTE85	ECG85	SK3124A/289A	WEP66/199	121-Z9065
Q603,604	2SC2230A 2SC2230A-Y	A63325060		NTE399 NTE399	ECG399 ECG399	SK9352/399 SK9352/399	WEP68/287* WEP68/287*	121-Z9045* 121-Z9045*
Q801	2SC2230A-GR 2SD1294	A63325070 A63867051		NTE399 NTE270	ECG399 ECG270	SK9352/399 SK9421	WEP68/287*	121-Z9045*
# Q803	S1854 S1854FA-2	A6907753						

PARTS LIST AND DESCRIPTION (Continued)

When ordering parts, state Model, Part Number, and Description

SEMICONDUCTORS (Select replacement transistor for best results)

ITEM No.	TYPE No.	MFGR. PART No.	NOTES	REPLACEMENT DATA			
				ECG PART No.	RCA PART No.	WORKMAN PART No.	ZENITH PART No.
Q902 thru Q904	2SC2068	A6319400		ECG376	SK3219	WEP779/198	121-Z9028
Q905 thru Q907	2SA1321	A6547300					
Q908 thru Q910	2SC3333			ECG399	SK9352/399	WEP68/287*	121-Z9045*
	2SC3334	A6360250		ECG399	SK9352/399	WEP68/287*	121-Z9045*
QA30,31	2SC1815-O	A6317526		ECG85	SK3124A/289A	WEP66/199	121-Z9065
QA32	2SC1815Y			ECG85	SK3124A/289A	WEP66/199	121-Z9065
	2SC1815-Y	A6317547		ECG85	SK3124A/289A	WEP66/199	121-Z9065
QA60	2SC1815GR			ECG85	SK3124A/289A	WEP66/199	121-Z9065
	2SC1815-GR	A6317567		ECG85	SK3124A/289A	WEP66/199	121-Z9065
	2SC1815-Y	A6317547		ECG85	SK3124A/289A	WEP66/199	121-Z9065
QA61,62	2SA1015Y			ECG290A	SK9132	WEP911/290A	121-Z9003*
	2SA1015-Y	A6534045		ECG290A	SK9132	WEP911/290A	121-Z9003*
QA63,64	2SC1815GR			ECG85	SK3124A/289A	WEP66/199	121-Z9065
	2SC1815-GR	A6317567		ECG85	SK3124A/289A	WEP66/199	121-Z9065
	2SC1815-BL	A6317581		ECG85	SK3124A/289A	WEP66/199	121-Z9065
QB06	2SC1815Y			ECG85	SK3124A/289A	WEP66/199	121-Z9065
	2SC1815-Y	A6317547		ECG85	SK3124A/289A	WEP66/199	121-Z9065
QB19	2SA1015-O	A6534021		ECG290A	SK9132	WEP911/290A	121-Z9003*
	2SA1015-Y	A6534045		ECG290A	SK9132	WEP911/290A	121-Z9003*
QB20,21	2SC1815-O	A6317526		ECG85	SK3124A/289A	WEP66/199	121-Z9065
	2SC1815-Y	A6317547		ECG85	SK3124A/289A	WEP66/199	121-Z9065
QB35	2SC1815Y			ECG85	SK3124A/289A	WEP66/199	121-Z9065
	2SC1815-Y	A6317547		ECG85	SK3124A/289A	WEP66/199	121-Z9065
QB36	2SC1815GR	A6317567		ECG85	SK3124A/289A	WEP66/199	121-Z9065
QB60	2SC1815Y			ECG85	SK3124A/289A	WEP66/199	121-Z9065
	2SC1815-Y	A6317547		ECG85	SK3124A/289A	WEP66/199	121-Z9065
QE02,03	2SC1815Y			ECG85	SK3124A/289A	WEP66/199	121-Z9065
	2SC1815-Y	A6317547		ECG85	SK3124A/289A	WEP66/199	121-Z9065
QE07	2SC2073	A6319550		ECG375	SK3929	WEP763/375	121-Z9106
QE08	2SC2482	A6330000		ECG399	SK9352/399	WEP68/287*	121-Z9045*
QE35	2SC2655-O	A6333310		ECG293	SK3849/293	WEP912/293	121-Z9066
	2SC2655-Y	A6333320		ECG293	SK3849/293	WEP912/293	121-Z9066

(1) Used in some versions.

\# For SAFETY use only equivalent replacement part.
* Lead configuration may vary from original.

PARTS LIST AND DESCRIPTION (Continued)

When ordering parts, state Model, Part Number, and Description

ELECTROLYTIC CAPACITORS

ITEM No.	RATING	MFGR. PART No.
C175	1 25V NP	24085031

ITEM No.	RATING	MFGR. PART No.
C306	.22 50V	24587228

Items Not Listed Are Normally Available At Local Distributors.

CAPACITORS

ITEM No.	RATING	MFGR. PART No.
# C440	.0024 1.6KV	24095930
# C441	.003 1.6KV	24095928
# C442	.2 200 V	24828204
C551	2.5-23 Trimmer	24094541
# C801	.082 125VAC	24095852
# C802	.0022 250VAC	24094909

ITEM No.	RATING	MFGR. PART No.
# C804	.0022 250VAC	24094909
CB50	12-160 Trimmer	24093987
ZA01	Cap Block	24094681
ZA02	Cap Block	24094681
ZA03	Cap Block	24094834

\# For SAFETY use only equivalent replacement part.
Items Not Listed Are Normally Available At Local Distributors.

RESISTORS (Power and Special)

ITEM No.	RATING	REPLACEMENT DATA		
		MFGR. PART No.	NTE PART No.	WORKMAN PART No.
# R336	270 5% 2W Metal Oxide Film	24554271	2W127	22-4082
R401	3900 2% 1/4W Metal Film	24003989	QW239	
R406	150K 2% 1/6W Carbon Film	24367154	QW415	
R410	15K 2% 1/4W Metal Oxide Film	24003990	QW315	
# R416	6200 5% 2W Metal Oxide Film	24383622	2W262	
# R418	6200 5% 2W Metal Oxide Film	24383622	2W262	
# R475	91 5% 1/6W Carbon Film	24366910		
# R478	15K 1% 1/4W Metal Film	24327153		
# R482	6800 1% 1/4W Metal Oxide Film	24327682		
# R496	11K 5% 2W Metal Oxide Film	24554113	2W311	
# R614	1500 5% 1W Fusible	24532152	1W215	
# R805	1M 5% 1/2W Carbon Comp	24942105	HW510	
# R808	PTC 12.1 Cold	24000882		FR605
# R810	4.7 10% 7W WW	24007933		
# R811	240 5% 10W WW	24541241		
# R812	6.8 5% 5W WW	24007952	5W6D8	
# R916	15K 5% 2W Metal Oxide Film	24554153	2W315	22-4124
# R917	15K 5% 2W Metal Oxide Film	24554153	2W315	22-4124
# R918	15K 5% 2W Metal Oxide Film	24554153	2W315	22-4124
R919	15K 1% 1/4W Metal Film	24327153		
# R920	3 5% 1W Fusible	24000884	F1W3D0	
R921	16K 1% 1/4W Metal Film	24327163		
R927	16K 1% 1/4W Metal Oxide Film	24327163		
RA35	820 2% 1/6W Carbon Film	24367821	QW182	
# RE10	3300 5% 3W Metal Oxide Film	24384332		
# RE13	43K 5% 2W Metal Oxide Film	24383433	2W343	
# RE14	10K 5% 3W Metal Oxide Film	24384103		
# RE17	33 5% 3W Metal Oxide Film	24384330		
# RE30	18K 5% 2W Metal Oxide Film	24554183	2W318	22-4126

\# For SAFETY use only equivalent replacement part.